UGC INDEXED ISSN : 2349-2597

International Research Journal of Higher Science
Quarterly Bilingual

SCIENCE PHENOMENON

Pattern :
Prof. Makkhanlal Parashar
Prof. Vivek Kumar (JNU, New Delhi)
Prof. D. Sundram
Dr. Anupam Jain

Editorial Review Board :
Dr. A.K. Panday (BHU, Varanasi)
Dr. A.K. Dubey (Govt. Dergee College, Joshimath, Uttrakhand)
Kunwar Singh (Govt. Dergee College, Joshimath, Uttrakhand)
Dr. Vikram Singh (Agra College, Agra.)

Editor-in-Chief
Dr. Amit Jain

An official publication of
Amit Educational and Social Welfare Society (Regd.)
Firozabad (U.P.) Regd. No. UP AG-37474, R.N. No. 1552

Issue - 16
Vol.-16 (Oct.-Dec., 2017)

Call for Membership : 09837208441

Statement about Ownership and other Particulars

Place of publication	:	439, Indra Colony Street No. 4, Repura Road, Firozabad (U.P.) India.
Periodicity of publication	:	Quarterly
Name of publisher	:	Dr. Amit Jain
Name of Editor	:	Dr. Amit Jain
Name of Printer	:	Madhuri Ofset, Firozabad
Owner of the journal	:	Amit Educational and Social Welfare Society.

I, Dr. Amit Jain, declare that the statement given above is to my knowledge and belief.

Dr. Amit Jain
01, Jan. 2014

© All rights reserved - Dr. Amit Jain

Address for Correspondence
Dr. Amit Jain
439, Indra Colony,
Street No. 4, Repura Road,
Kotla Chungi, Firozabad 283203 (U.P.) India
Mobile No. 09837208441
Mail : amit_0190@rediffmail.com
Visit : www.amitdeliberativeresearch.com

सम्पादकीय

''देर रात तक जागने वालों में, जल्दी सोने वालों की तुलना में मौत की आशंका 10 प्रतिशत अधिक रहती है''

प्रिय शोधकर्ता,

बॉडी की वायलॉजिकल क्लॉक (शरीर की आंतरिक घड़ी) अर्थात आंतरिक जैविक समय से शरीर की बाहरी क्रियाऐं जब मेल नहीं खाती हैं या आस–पास के वातावरण से मेल नहीं खाती हैं तो समझ लीजिए कि शरीर के हार्मोन्स का संतुलन बिगड़ रहा है और इसका सबसे बड़ा कारण हो सकता है रात देर तक जागना और सुबह देर से सोकर उठना। रात को देर से सोने पर कोर्टिसोल नामक हार्मोन ज्यादा उत्सर्जित होने लगता है इससे ब्लड प्रेशर, हार्टरेट बढ़ना, स्ट्रोक आना और डायबिटीज की सम्भावना बढ़ती है, किन्तु यहाँ ध्यान देने योग्य यह है कि देर रात तक जागने और सुबह देर से उठने की आदत से बॉडी की वायलॉजिकल क्लॉक का संतुलन बिगड़ जाता है, क्योंकि शोध के अनुसार हमें सूरज के साथ चलने के लिए बनाया गया है अर्थात सूर्योदय से सूर्यास्त तक का समय प्रत्येक के लिए वर्किंग हावर्स है। ऐसे लोग जो इसका अनुशरण करते हैं उनकी बॉडी की वायलॉजिकल क्लॉक संतुलित रहती है और आस–पास के वातावरण से मेल कर इन्हें स्वस्थ रखती है। ऐसे लोग मोटे नहीं होते हैं और देर रात तक जागने वालों की तुलना में 10 प्रतिशत अधिक जीवन जीते हैं। सुबह देर से बिस्तर छोड़ने वालों के लिए बुरी खबर यह भी है कि जिस कमरे में ये सोते हैं, उस कमरे का वातावरण, इनके अतिरिक्त सोने वाले समय से, संक्रमित हो जाता है। यदि उस कमरे में कोई स्वस्थ्य व्यक्ति प्रवेश करे तो इनके द्वारा छोड़ी गयी सांसे उसे तुरन्त स्पर्श करने लगती हैं और उसके बीमार होने का खतरा बढ़ जाता है। इसके अतिरिक्त सुबह देर तक सोने वाले व्यक्ति बाहर के प्राकृतिक वातावरण में देर से सम्पर्क में आते हैं, इसके कारण वे सुबह के प्राकृतिक तत्वों को ग्रहण नहीं कर पाते और जो अवशिष्ट उनके शरीर से बाहर आने चाहिए वे अन्दर ही रहकर इन्हें बीमार बनाकर इनके बॉडी की वायोलॉजिकल क्लॉक को असंतुलित कर देते हैं। अब निर्णय आपके हाथ में है कि 10 प्रतिशत अधिक जीना चाहते हैं, या अपने जीवन को 90 प्रतिशत में ही समाप्त करना चाहते हैं।

प्रधान सम्पादक
डॉ0 अमित जैन
email : dr.amit0190@gmail.com
www.amitdeliberativeresearch.com
Mob. 09837208441

UGC Journal Details

Name of the Journal :	SCIENCE PHENOMENON
ISSN Number :	23492597
e-ISSN Number :	
Source :	UNIV
Subject :	Computer Science Applications;Computer Science (all); Control and Systems Engineering
Publisher :	Amit International Impact Factor Journals
Country of Publication :	India
Broad Subject Category :	Science

INDEX

SCIENCE PHENOMENON

(International Research Journal of **Higher Science**
Quarterly Bilingual)

S.No.	Research Papers	Pages
1-	**Efficient Synthesis of CdSe QDs Using Cadmium Acetate Precursor** A P Singh	1-5
2-	**Effect Of Heat Source On MHD Convective Flow Through Porous Medium** Dr. Balvir Singh	6-12
3-	**Amoebiasis : A Review** Dr. Veena Bhalla	13-18
4-	**Environmental Security Considering Human Security: Thought, Conflict, Co-operation And Importance** Dr. Samar Vir Singh Rathore, Vidhu Grace Noel	19-23
5-	**Preparation And Characterization Of Mixed Ligand Complexes Of Hydroxamic Acids With Potassium Hexathiocyanato Chromium (iii) Tetra Hydrate** Ajay Agarwal, Virendra Mishra, Satnam Arora	24-30
6-	**Analysis Of Multistage Markov Manufacturing System With Rework And Inspection.** Susheel Kumar	31-43
7-	**Hydrolysis Of 2-Chloro-6-Methyl Aniline Phosphate Triester Undergoes S_N^2 Mechanism With P-N Bond Fission** Dr. Amit Chaudhary	44-50
8-	**Study Of Hydromagnetic Spherical Shock Wave In Non-Ideal Gas.** Dr. C.V. Singh	51-53
9-	**Relative Toxicity Of Neem-Based Pesticides On Tobacco Caterpillar Of Spodoptera Litura (Fabr.)** Dr. Manoj Kumar	54-56
10-	**The Studies Of Fractional Ionic Character Of Alkali Halide And Alkaline Earth Chalcoginides Based On Energy Gap Model** Dr. Alok Saxena and Dr. Prabhakar Singh	57-59
11-	**Analysis Of Inverted Type High Temperature Equations Of State For Solids** Digpratap Singh	60-66
12-	**Molecular Interaction Studies in Ultrasonic Testing.** Dr. Akanksha Rashmi, Dr. Ravi Pratap Singh	67-73
13-	**A Study of Uses of Elementary Statistics** Dr. Rajiv Phillip	74-78

ISSN : 2349-2597

Efficient Synthesis Of CdSe QDs Using Cadmium Acetate Precursor

A P Singh
Department of Physics, Multanimal Modi College Modinagar,
Uttar Pradesh–201204, India, E-mail: aman_pal_2000@yahoo.com

Abstract. We report one-step synthesis procedure for CdSe quantum dots (QDs) using Cadmium Acetate precursor. Powder X-ray diffraction shows hexagonal structure of QDs. TEM and HRTEM images of QDs reveal that they are almost mono disperse and of size ? 4 nm. The precursor and reaction time affect size. The size of QDs increases with reaction time.
Keywords: Cadmium Selenide, Synthesis, Quantum Dots

Introduction

Monodispersed II?VI group semiconducting nanoparticles (NPs) have attracted much attention of researchers due to their potential applications as non-linear optical materials[1], in devices for biomedical imaging[2] and as photovoltaics.[3] The band gap of these semiconducting nanoparticles depends on their size and shape. Chemical routes for this purpose are widely used, as size, shape and morphology of nanoparticles can be easily controlled by changing conditions of synthesis and reagents. Such a control is difficult in physical methods like epitaxial growth and sputtering. Apart from an advantage of both size and shape[4?8] control over physical methods, the production of nanoparticles in large quantities is an additional advantage of chemical methods. In chemical method, the size of nanoparticles formed is dependent on the nucleation step (key parameter), which can be separated from their growth by adding a hot surfactant solution, which leads to a narrow distribution of size of nanoparticles. The final shape of the nanoparticles is, moreover, determined by the crystalline structure of the particles during nucleation, provided no structural phase transitions occur during growth. The nanoparticles of CdSe exist in two crystalline structures: Wurtzite (W, hexagonal) and Zinc blende (ZB, cubic).[9] The reaction conditions and precursors of cadmium used for their synthesis of control the structure. The mild one gives ZB and harsh one W structure.

Cadmium selenide NPs, produced by chemical methods, are most popular among cadmium chalcogenides nanoparticles[10] due to their unique optical and electrical properties. There are many studies which have reported chemical synthesis of CdSe.[4, 11?13] . Some investigations on CdSe nanoparticles coated with shells of ZnSe or ZnS[15?19] have also reported. In this paper we are reporting synthesis of CdSe QDs using new and comaratively less toxic precursor. The temporal evolution of CdSe QDs using said precursor have been studied. The addition of octadecylamine narrows the size distribution of CdSe QDs during their growth.

Experimental Details

The reagent grade cadmium(II) acetate hydrate (99.99%), selenium (99.5%, 100 mesh), trioctylphosphine oxide (TOPO), trioctylphosphine (TOP), 1-octadecene (ODE), oleic acid (OA), octadecylamine (ODA) were procured from Aldrich (USA) and used as received. All organic solvents (HPLC grade) were obtained from Merck (India). Other chemicals were procured locally.

The synthesis of CdSe QDs was conducted in a moisture and oxygen-free atmosphere. CdSe QDs were synthesized using a one-step process involving reduction of cadmium(II) acetylacetonate or acetate. A 0.1 mmol of Se was dissolved in 1 mL of tri-n-octylphosphine (TOP) and kept in a syringe as TOPSe. A 0.1 mmol of cadmium precursor (cadmium(II) acetylacetonate or acetate) and 0.4 mmol of oleic acid (OA) were added to 4 mL of 1-

octadecene (ODE) and heated to 240 °C with continuous stirring under an N_2 atmosphere until a colorless solution was obtained. The temperature was lowered to room temperature and 1.5g of octadecylamine (ODA) and 1.5g of tri-n-octylphosphine (TOPO) were added to the mixture, which was further heated to 300 °C under N_2 atmosphere with continuous stirring. After attaining a constant temperature, TOPSe solution was injected swiftly in the reaction mixture. The temperature fell down to 270 °C and the reaction mixture was allowed to reflux. The reaction mixture was cooled down and washed thrice with a 1:1 mixture of hexane and methanol, allowing separation of the QDs in hexane and the unreacted precursors. Finally, the QDs were precipitated by adding ethanol to the hexane layer, separated by centrifugation and redissolved in hexane.

The powder XRD measurements were made on a Bruker D8 advanced powder X-ray diffractometer with 2θ range 10 to 70° with the step size of 0.05° and step time 1 s. A Cu radiation source was used along with a polycapillary lens and a Ni filter to provide the incident beam. The power settings on the X-ray generator were 45 kV and 40 mA. The samples of CdSe used for the powder XRD measurements were prepared by placing a colloidal solution of CdSe QDs on a glass slide and the solvent was removed by drying in a vacuum oven at 30°C for several hours. TEM images were recorded on a Philips instrument model CM? 12 operated at an accelerating voltage of 100 kV and high resolution TEM on an instrument model FEI Technai G220 with accelerating voltage of 200 kV. Samples were prepared on 200-mesh carbon coated Cu grids by dropping 10 μL of solutions the QDs in hexane and allowing the solvent to evaporate.

Results and Discussion

The quality of CdSe QDs synthesized by present procedure in a non-coordinating solvent[22] octadecene, was found good with nearly monodisperse size and shape. The temporal study was undertaken to investigate the crystal growth of CdSe QDs. For these studies (i) the ratio of cadmium precursor cadmium(II) acetate to selenium, (ii) the moles of (TOPO) and ODA and (iii) the temperature of the reaction mixture over a 20 minutes time period were kept constant. From reaction mixture aliquots were taken and quenched in hexane at time intervals of 1, 3, 5, 10, 15, and 20 minutes from the start.

The powder-XRD patterns obtained for QDs prepared from cadmium(II) acetate are shown in Figure 1. It suggest that CdSe QDs have wurtzite structure. The wurtzite structure is commonly formed in high temperature (? 270ºC) synthesis[19] of CdSe QDs carried in TOPO (containing amine). This is consistent with our results. Palchik et al.[20] observed formation of cubic CdSe at 287°C when the solvent used was triethylene glycol and formation of hexagonal CdSe at 196°C in ethylene glycol. The small size of presently prepared CdSe QDs is indicated by broad nature of X-ray diffraction peaks (Figure 1). The average diameter of these QDs by Scherrer's formula[21] has been found to be 3.64 nm when particles were obtained from cadmium(II) acetate.

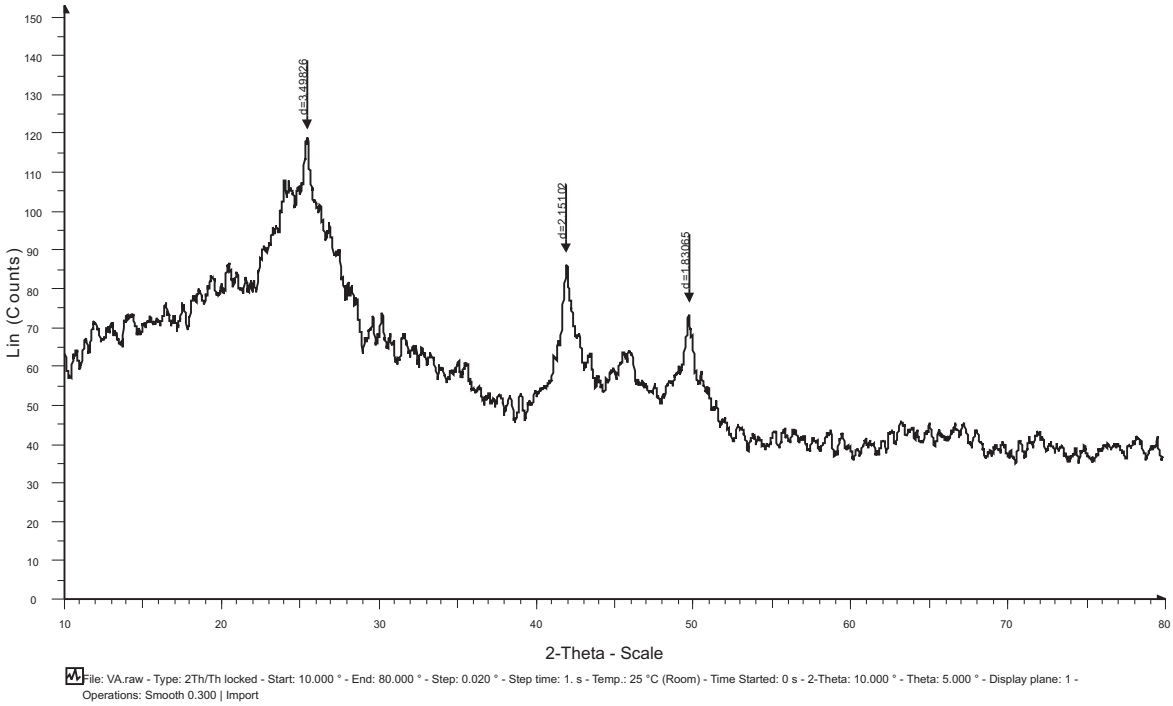

Figure 3. X-Ray Diffraction Pattern of CdSe QDs obtained from cadmium acetylacetonate (VAA-Bottom) and acetate (VA-Top) precursor respectively

The TEM and HRTEM images of the QDs are given in Figure 2. The average diameter of QDs from TEM has also been found to be 3.89 nm for cadmium sources, cadmium(II) acetate. These results about size are consistent with those obtained from powder XRD and absorption spectra. The TEM images suggest that QDs are nearly spherical and mono-disperse. The HRTEM images also reveal the high crystallinity of the QDs and their size of the order ? 4 nm.

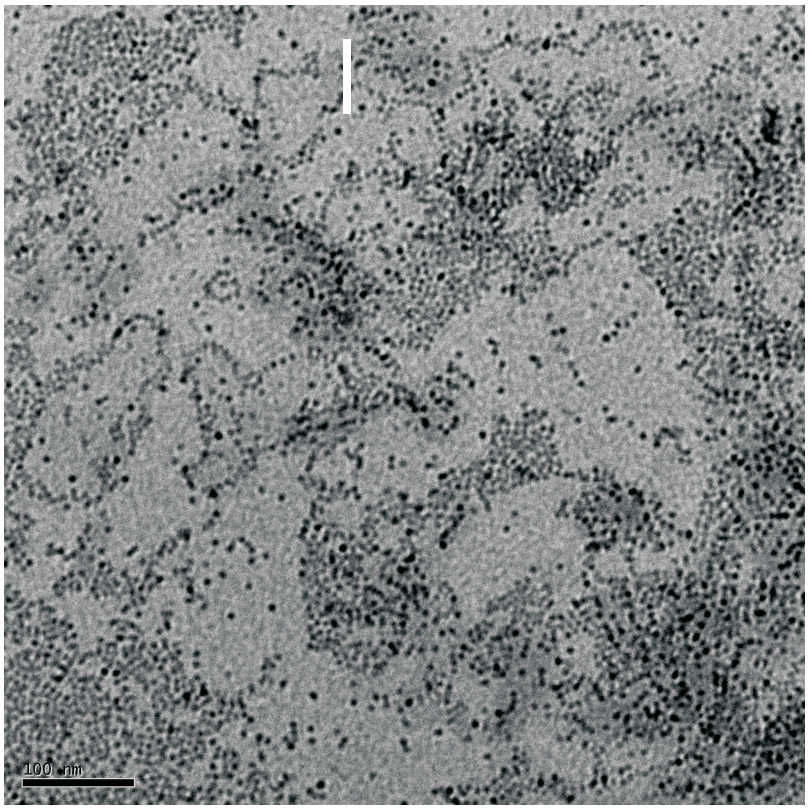

[[3]]

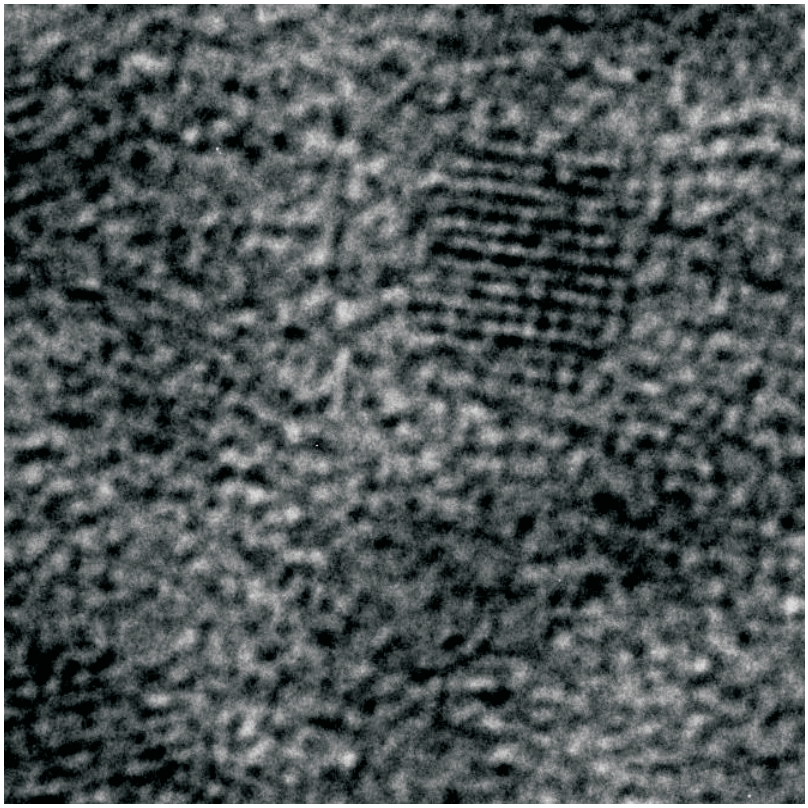

Figure 2. TEM (100 nm scale) and HRTEM (at corner, 5 nm scale) images of CdSe nanoparticles synthesized from cadmium acetate

Conclusion

The similar hexagonal CdSe QDs of good dispersity and small size of the order ? 4 nm have been prepared usin cadmium(II) acetate precursors. The other advantages of the present route is: (i) the precursors acetate used are less toxic, more stable and crystalline and (ii) solvents used are not expensive.

References

1- K.L. Moran, W.T.A. Harrison, I. Kamber, T.E. Gier, X.H. Bu, D. Herren, P. Behrens, H. Eckert, G.D. Stucky, Chem. Mater. 8 (1996) 1930?1943.
2- A. H. Fu, W. W. Gu, C. Larabell, A. P. Alivisatos, Cur. Opin. Neurobiol. 15 (2005) 568?575.
3- Y. Liu, L. Wang, Y. Cao, Front Chem China. 2 (2007) 383?363.
4- X. Peng, L. Manna, W. Yang, J. Wickham, J. Scher, A. Kadavanich, A.P. Alivisators, Nature. 404 (2000) 59?61.
5- X. G. Peng, Adv. Mater. 15 (2003) 459?463.
6- Y. W. Jun, Y. Y. Jung, J. J. Cheon, J. Am. Chem. Soc. 124 (2002) 615?619.
7- E. C. Scher, L. Manna, A. P. Alivisatos, J. Am. Chem. Soc. 361 (2003) 241?255.
8- L. Manna, E. C. Scher, A. P. Alivisatos, J. Am. Chem. Soc. 122 (2000) 12700?12706.
9- V. A. Fedorov, V. A. Ganshin, Y. N. Korkishko, Phy. Status. Solidi. A. 126 (1991) K5.
10- C. B. Murray, D. J. Norris, M. G. Bawendi, J. Am. Chem. Soc. 115 (1993) 8706?8715.
11- S. D. Bunge, K. M. Krueger, T. J. Boyle, M. A. Rodriguez, T. J. Headley, V. L. Colvin, J. Mater. Chem. 13 (2003) 1705?1709.
12- J. Hambrock, A. Birkner, R. A. Fisher, J. Mater. Chem. 11 (2001) 3197?3201.
13- X. C. Jiang, B. Mayers, T. Herricks, Y. N. Xia, Adv. Mater. 15 (2003) 1740?1743.
14- J. S. Steckel, J. P. Zimmer, S. Coe-Sullivan, N. E. Stott, V. Bulovic, M. G. Bawendi, Angew. Chem-Int. Ed. 43 (2004) 2152?2154.
15- B. O. Dabbousi, J. Rodriguez Viejo, F. V. Mikulec, J. R. Heine, H. Mattoussi, R. Ober, K. F. Jensen, M. G. Bawendi, J. Phy. Chem. B. 101 (1997) 9463?9475.
16- P. Reiss, J. Bleuse, A. Pron, Nano Lett. 2 (2002) 781?784.
17- D. C. Pan, Q. Wang, S .C. Jiang, X. L. Ji, L. J. An, Adv. Mater. 17 (2005) 176?179.

18- W. X. Zhang, C. Wang, L. Zhang, X. M. Zhang, X. M. Liu, K. B. Tang, Y. T. Qian, J. Solid State Chem. 151 (2000) 241? 244.
19- L. Qu, X. Peng, J. Am. Chem. Soc. 124 (2002) 2049? 2055.
20- O. Palchic, R. Kerner, A, Gedanken, A. M. Weiss, M. A. Slifkin, V. Palchik, J. Mater. Chem. 11 (2001) 874? 878.
21- A. L. Washington II, G. F. Strouse, Chem. Mater. 21 (2009) 3586? 3588.

ISSN : 2349-2597

Effect Of Heat Source On MHD Convective Flow Through Porous Medium

Dr. Balvir Singh
Department of Mathematics, R P Degree College, Kamalganj, Farrukhabad

Abstract

Aiom of this study to investigate the effect of heat source on free convection flow of an incompressible, electrically conducting, viscous, liquid through a time dependent porous medium past an infinite, isothermal, vertical, porous plate is studied. A constant heat source is considered in the flow region in the presence of transversely applied uniform magnetic field and a time dependent suction velocity. To obtain the analytical solutions of velocity field and temperature field, perturbation technique is used. The expressions for skin-friction and heat transfer are also obtained. The effects of various parameters on the steady part of velocity and the time dependent part of velocity are discussed with the help of figures.

Introduction

The free convection problems have been given a considerable amount of interest because of its importance in atmospheric and oceanic circulations, nuclear reactors, power transformers etc. Many scientists have studied problems on free convection under the influence of magnetic field due to its application in

Key Word: Magnetic field, vertical plate, heat source, porous medium

Astrophysics, Geophysics, Engineering, Aerodynamics etc. Extensive reviews of the free convection flows have been done by Ede (1967), Gebhart (1973) and Nield & Bejan (1992).

Leminar free convection flow of an viscous fluid past an infinite porous plate was discussed by Soundalgekar (1972). Purushothaman et.al (1990) have studied free convection in an infinite porous medium due to a pulsating point heat source. Jha (1991) studied a unsteady mixed convection flow past an infinite vertical porous plate with constant heat source. This study was further extended by Jha (1991) to investigate the effects of Hall current in wall temperature oscillation on free convective and mass transfer flow in a rotating porous medium with constant heat source. A further extension under different boundary conditions has been analysed by Jha & Prasad (1992) considering MHD free convection and mass transfer flow through porous medium with heat source. Prathiban & Patil (1995) studied the effects of non-uniform boundary temperatures on thermal instability in a porous medium with internal heat source. Pop et.al (1995) presented an analysis on mixed convection in a porous medium produced by a line heat source.

In this series, Hsu et. al. (1997) have analyzed natural convection of micro polar fluid in an enclosure with heat sources. Das & Lahiri (1999) studied three dimensional coupled thermoplastic interactions due to instantaneous point heat source. Recently, Singh et.al (2001) have discussed free convection in MHD flow of a rotating viscous liquid in porous medium past a vertical porous plate considering the presence of a heat source. Gireesha and Bagewadi (2003) have discussed a study of two dimensional dusty fluids flow under transverse magnetic fluid. Jha et al. (2006) have discussed on Effects of permeability on three-dimensional oscillatory free convective MHD flow and heat transfer along an infinite vertical porous plate. Madhukar and Jha (2007) have studied on MHD Free Convective Flow of viscous fluid through a porous medium bounded by an Oscillating Porous Plate in Slip Flow Regime with Heat Source/Sink. Sharma et al (2010) have discussed on MHD Visco-Elastic Boundary Layer Flow Through Porous Medium with Free Convection Past a Continuous

Moving Surface with Heat Source. Singh (2013) has studied on Effects of chemical reaction and hall current on unsteady MHD flow through porous medium over moving infinite vertical plate with thermal radiation. Khan et al. (2014) have studied on Mixed Convection MHD Flow of a Viscous Fluid through porous medium in a Vertical Channel with Heat Source. The aim of present investigation is to study the convective flow of a viscous fluid past an infinite porous vertical plate through a time dependent porous medium and time dependent suction in the presence of a transverse uniform magnetic field and a constant heat source.

In the present paper we study of free convection flow of an incompressible, electrically conducting, viscous, liquid through a time dependent porous medium past an infinite, isothermal, vertical, porous plate is studied. A constant heat source is considered in the flow region in the presence of transversely applied uniform magnetic field and a time dependent suction velocity. To obtain the analytical solutions of velocity field and temperature field, perturbation technique is used. The expressions for skin friction and heat transfer are also obtained. The effects of important parameter on steady part of velocity and time dependent part of velocity are discussed with the help of figures. The effects of various parameters on skin-friction are discussed with the help of a table.

Formulation Of The Problem

In Cartesian system, we consider the two dimensional flow of a electrically conducting, incompressible, viscous liquid through a porous medium past an infinite isothermal vertical porous plate with constant heat source at y = 0 in the presence of a uniform magnetic field B_0 applied normal to the flow. The porous medium is a non-homogeneous as such it can be taken as a function of t say K(t). The analysis of the present problem is based on the following assumptions:

(i) The x-axis is along the plate an y-axis normal to it.

(ii) A uniform magnetic filed $\vec{B}_0 (= \mu_e H_0)$ is the applied magnetic field and acts in the y-direction.

(iii) The permeability of the medium is an exponential decreasing function of time.

(iv) The plate temperature varies in the presence of a heat source.

(v) The magnetic Reynold's number is small so the induced magnetic field is negligible.

(vi) The plate is infinite in extent; therefore all the physical variables except pressure depend on y and t only.

(vii) The suction velocity is an exponential decreasing function of time.

The governing equations for continuity, momentum and energy for the present problem, under the present configuration, are:

$$\frac{\partial v}{\partial y} = 0 \qquad \ldots(1)$$

$$\frac{\partial u}{\partial t} + v\frac{\partial u}{\partial y} = g\beta\left(T - T_\infty\right) + \upsilon\frac{\partial^2 u}{\partial y^2} - \frac{\sigma B_0^2 u}{\rho} - \frac{\upsilon}{k(t)}u \qquad \ldots(2)$$

$$\left[\frac{\partial T}{\partial t} + v\frac{\partial T}{\partial y}\right] = \frac{K_T}{\rho C_P}\frac{\partial^2 T}{\partial y^2} - \frac{S\left(T - T_\infty\right)}{\rho C_P} \qquad \ldots(3)$$

Where u and v are the component of the velocity in the x and y directions respectively. g is the acceleration due to gravity, β is the coefficient of volume expansion, t, ρ, υ, K_T, C_P, σ, S, U_0 are respectively the time, density, kinetic viscosity, thermal conductivity, specific heat of the fluid at constant pressure, electrical conductivity of the fluid, heat source and

mean velocity. T_w and T_∞ are the temperature of the plate and temperature of the fluid far away from the plate and other symbols have their usual meaning.

The continuity equation (1) shows that v is a function of time only.
Therefore we assume:

$$v = -v_0\left(1+\in e^{-nt}\right) \qquad \ldots(4)$$

where $v_0 > 0$ is a real constant, n is a positive constant, $\in$ is a small quantity (<<1) and the negative sign indicates that the suction is towards the plate.

Using assumption (vii) we assume:

$$k(t) = k_0\left(1+\in e^{-nt}\right) \qquad \ldots(5)$$

Where k_0 is the constant permeability of the medium.

The boundary conditions for the present problem are:

$$\left.\begin{array}{llll} u = U_0\left(1+\in e^{-nt}\right), & T = T_\infty\left(1+\in e^{-nt}\right) & at & y = 0 \\ u \to 0, & T \to T_\infty & as & y \to \infty \end{array}\right\} \qquad \ldots(6)$$

Substituting (4) and the value of k(t) in (2) and (3), we get:

$$\frac{\partial u}{\partial t} - v_0\left(1+\in e^{-nt}\right)\frac{\partial u}{\partial y} = g\beta\left(T - T_\infty\right) + \upsilon\frac{\partial^2 u}{\partial y^2} - \frac{\sigma B_0^2 u}{\rho} - \frac{\upsilon u}{k_0\left(1+\in e^{-nt}\right)} \qquad \ldots(7)$$

$$\frac{\partial T}{\partial t} - v_0\left(1+\in e^{-nt}\right)\frac{\partial T}{\partial y} = \frac{K_T}{\rho C_P}\frac{\partial^2 T}{\partial y^2} - \frac{S\left(T - T_\infty\right)}{\rho C_P}$$

…(8)

We introduce the following non-dimensional quantities:

$$y^* = \frac{v_0 y}{\upsilon}, \quad T^* = \frac{\left(T - T_\infty\right)v_0}{\upsilon}, \quad u^* = \frac{u}{U_0}, \quad t^* = \frac{t v_0^2}{\upsilon}, \quad n^* = \frac{\upsilon n}{v_0^2},$$

$$k_0^* = \frac{k_0 v_0^2}{\upsilon^2} \text{ (Permeability Parameter)}, \quad S^* = \frac{\upsilon S}{\rho C_P v_0^2} \text{ (Heat source parameter)}$$

Using the above non-dimensional quantities in (7) and (8) and ignoring the stars over them, we get:

$$\frac{\partial u}{\partial t} - \left(1+\in e^{-nt}\right)\frac{\partial u}{\partial y} = \frac{\partial^2 u}{\partial y^2} - M^2 u - \frac{u}{k_0\left(1+\in e^{-nt}\right)} + G_r T \qquad \ldots(9)$$

$$\frac{\partial T}{\partial t} - \left(1+\in e^{-nt}\right)\frac{\partial T}{\partial y} = \frac{1}{p_r}\frac{\partial^2 T}{\partial y^2} - ST \qquad \ldots(10)$$

Where $M = \sqrt{\dfrac{\sigma B_0^2 \upsilon^2}{\rho v_0^2}}$ (Magnetic parameter)

$G_r = \dfrac{g\beta\upsilon^2}{U_\infty v_0^3}$ (Grashof number) and $P_r = \dfrac{\mu C_P}{K_T}$ (Prandtl number)

The boundary conditions (6) transform to:

$$u = 1 + \in e^{-nt}, \qquad T = 1 + \in e^{-nt} \qquad at \quad y = 0$$
$$u \to 0, \qquad T \to 0 \qquad as \quad y \to \infty$$
(11)

Solution Of The Problem

To obtain the solution of the problem, we assume

$$\left.\begin{aligned} u(y,t) &= u_0(y) + \in u_1(y)e^{-nt} \\ T(y,t) &= T_0(y) + \in T_1(y)e^{-nt} \end{aligned}\right\} \qquad \ldots(12)$$

Substituting (12) in the equations (9) and (10) and comparing the harmonic and non-harmonic terms, we get

$$T_0''(y) + P_r T_0'(y) - SP_r T_0(y) = 0 \qquad \ldots(13)$$

$$T_1''(y) + P_r T_1'(y) - S_1 P_r T_1(y) = -P_r T_0'(y) \qquad \ldots(14)$$

$$u_0''(y) + u_0'(y) - M_1 u_0(y) = -G_r T_0(y) \qquad \ldots(15)$$

$$u_1''(y) + u_1'(y) - M_2 u_1(y) = -G_r T_1(y) - \frac{1}{k_0} u_0' \qquad \ldots(16)$$

Where $S_1 = S - n, \quad M_1 = M^2 + \frac{1}{k_0} \quad and \quad M_2 = M^2 + \frac{1}{k_0} - n$ The boundary conditions (12) are transformed to

$$\left.\begin{aligned} &u_0 = 1, \quad u_1 = 1, \quad T_0 = 1, \quad T_1 = 1 \quad at \quad y = 0 \\ &u_0 \to 0, \quad u_1 \to 0, \quad T_0 \to 0, \quad T_1 \to 0 \quad as \quad y \to \infty \end{aligned}\right\} \qquad \ldots(17)$$

The solution of the above coupled equations (13) to (16) under the boundary conditions (17), we get:

$$T_0(y) = e^{-m_1 y} \qquad \ldots(18)$$

$$T_1(y) = (1 + a_1)e^{-m_2 y} - a_1 e^{-m_1 y} \qquad \ldots(19)$$

$$u_0(y) = (1 + a_2)e^{-m_3 y} - a_2 e^{-m_1 y} \qquad \ldots(20)$$

$$u_1(y) = (1 - a_6 - a_7 - a_8)e^{-m_4 y} + a_6 e^{-m_3 y} + a_7 e^{-m_2 y} + a_8 e^{-m_1 y} \qquad \ldots(21)$$

Where $m_1 = \frac{P_r + \sqrt{P_r(P_r + 4S)}}{2}, \qquad m_2 = \frac{P_r + \sqrt{P_r(P_r + 4S_1)}}{2}$

$$m_3 = \frac{1+\sqrt{1+4M_1}}{2}, \qquad m_4 = \frac{1+\sqrt{1+4M_2}}{2}$$

$$a_1 = \frac{P_r}{m_1^2 - m_1 P_r - S_1 P_r}, \qquad a_2 = \frac{Gr}{m_1^2 - m_1 - M_1}$$

$$a_3 = \frac{(1-a_2)}{k_0}, \qquad a_4 = -(1+a_1)Gr, \qquad a_5 = a_1 Gr + \frac{a_2}{k_0}$$

$$a_6 = \frac{a_3}{m_3^2 - m_3 - M_2}, \qquad a_7 = \frac{a_4}{m_2^2 - m_2 - M_2}, \qquad a_8 = \frac{a_5}{m_1^2 - m_1 - M_2}$$

Substituting the above values of $u_0(y)$, $u_1(y)$, $T_0(y)$ and $T_1(y)$ given in (18) to (21) in (12), we obtain

$$u(y,t) = (1+a_2)e^{-m_3 y} - a_2 e^{-m_1 y}$$

$$+ \in \left[(1-a_6-a_7-a_8)e^{-m_4 y} + a_6 e^{-m_3 y} + a_7 e^{-m_2 y} + a_8 e^{-m_1 y}\right]e^{-nt} \qquad ...(22)$$

$$T(y,t) = e^{-m_1 y} + \in \left[(1+a_1)e^{-m_2 y} - a_1 e^{-m_1 y}\right]e^{-nt} \qquad ...(23)$$

Discussion And Conclusions

Steady part of the velocity field and time dependent part of the velocity field are discussed to observe the effects of Prandtl number (P_r), magnetic parameter (M), permeability parameter (k_0), heat source parameter(S) and Grashof number (G_r) at (t = 1.0, n = 2.0, $\in$ =0.003) and are depicted in Fig.-1 and Fig.-2. The effects of Prandtl number (P_r) and heat source parameter (S) on temperature field (T) is shown in Fig.-3. The effects of Prandtl number (P_r), magnetic parameter (M), permeability parameter (k_0), heat source parameter (S), Grashof number (G_r) and frequency parameter (n) on skin-friction (τ) are represented in Table-1. The conclusions of the study are as follows:

1. An increase P_r, M or S decreases the steady part of velocity field while an increase in k_0 or G_r increases the steady part of velocity field.
2. An increase in k_0 and G_r both results in an increase in the steady part of velocity field.
3. An increase in P_r, M or S decreases the time dependent part of velocity field while an increase in k_0 or G_r increases the time dependent part of velocity field.
4. An increase in k_0 or G_r both results in an increase in the time dependent part of velocity field.
5. An increase in P_r or S or both (i.e. P_r, and S) decreases the temperature field.

References

1. J. Gireesha and C.S. Bagewadi (2003): A Study of two dimensional dusty fluids flow under transverse magnetic field, *Ganita,* Vol. 54 No. 2, pp. 189-202
2. Dass, N.C. and Lahiri, A (1999): Three dimensional Coupled thermo – elastic interactions due to instantaneous point heat source. *Ind. J. Pure. Appl. Math* Vol. 30, PP. 925 – 935
3. Ede, A.J. (1967): Advances in heat transfer. Academic Press New York, 4, 1.

4. Gebhort, B. and Pero, L. (1971): The nature of vertical natural convection flows resulting from the combined buoyancy effects of thermal and mass diffusion. *Int. J. Heat Mass Transfer* Vol. 14, PP 2025 – 2050
5. Jha, B.K. (1991): Unsteady mixed convection flow past an infinite vertical porous plate with constant heat source. *Astrophysics and space Science*, Vol.175 PP 101 – 105.
6. Jha, B.K. (1991) : Effect of Hall current and wall temperature oscillation on free convective and mass transfer flow in rotating porous medium with constant heat source., *Int. J. of Energy Research* Vol. 15, PP 79 – 84
7. Purushothaman, R. Ganapathy, R. and Hiremath, P.S. (1990): Free convection in an infinite porous medium due to a pulsating point heat source, ZAMM. Vol. 70 pp 41-48
8. Prathiban, C. and Palil, P.R. (1995): Effect of non uniform boundary temperature of thermal instability in a porous medium with internal heat source. Int. Journal. Heat Mass transfer, Vol. 22, PP 683 – 692
9. Pop, I. Ingham, D.B. and Miskin I. (1995): Mixed convection in a porous medium produced by a line heat source. Trans, porous media Vol. 18 PP 1 – 13
10. Nield D.A. and Bejan, A (1992): Convection in porous Media, Springer Verlog, New York.
11. H Su, T.H., Hsu, P.T. and Tsai, S.Y. (1997): Natural convection of micro polar fluids in an enclosure with heat sources Int J. Heat Mass Transfer Vol. 40, PP 4239 – 4249
12. Soundalgerker, V. M. (1972): *Indian J. Pure Appl. Math.* Vol. 3, No. 3, 426
13. Singh, N.P., Singh, A.K., Yadav, M.K. and Singh, A.K. (2001): Acta Ciencia Indica, Vol. XXVIII M.No.1, 358-365.
14. Jha, Rajeev, Kumar, D and R. K. Shrivasatava. (2006): Effects of permeability on three-dimensional oscillatory free convective MHD flow and heat transfer along an infinite vertical porous plate. Journal Acta Ciencia Indica, Vol. XXXII M, No. 4, 1453-1464.
15. Madhukar, J. and Rajeev Jha (2007): MHD Free Convective Flow of viscous fluid through a porous medium bounded by an Oscillating Porous Plate in Slip Flow Regime with Heat Source/Sink. Journal Acta Ciencia Indica, Vol. XXXIII M, No. 2, 581 -588.
16. Sharma, A. K., Singh, U. R. and Rajeev Jha (2010): MHD Visco-Elastic Boundary Layer Flow Through Porous Medium with Free Convection Past a Continuous Moving Surface with Heat Source, International Journal of stability and fluid Mechanics, UK, Vol.1, No. 2, pp. 163 - 170, 2010
17. Singh, N., Singh, U. R. and Jha, Rajeev (2013): Effects of chemical reaction and hall current on unsteady MHD flow through porous medium over moving infinite vertical plate with thermal radiation. World Journal of Applied Sciences and Research, Vol. 3, Issue – 1, 67 – 71.
18. Khan, M. F., Alawairdhi, M. and Jha, Rajeev (2014): Mixed Convection MHD Flow of a Viscous Fluid through porous medium in a Vertical Channel with Heat Source, International Journal of Engineering and Mathematical Sciences, Volume 6, Issue – 1, pp.23 – 31.

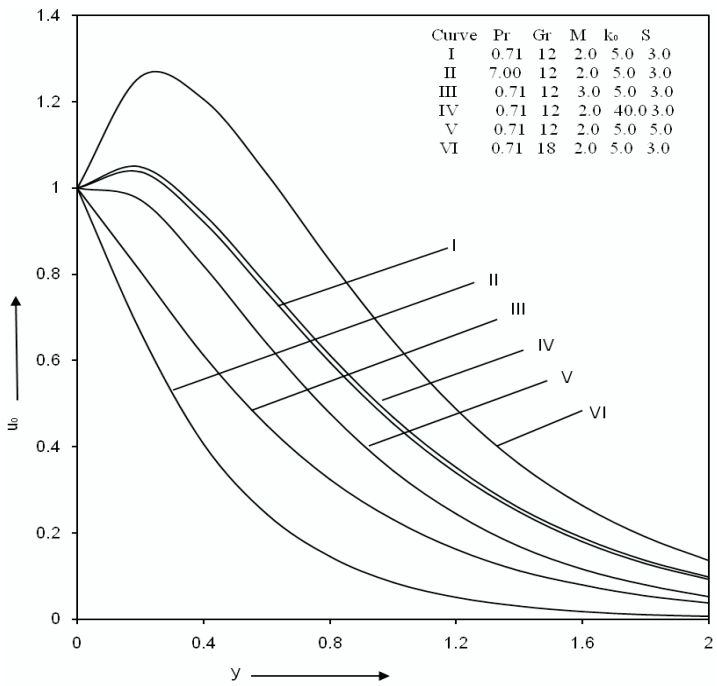

Fig. 1: Effects of Pr, M, k_0, S and Gr on the Steady Part of Velocity Field

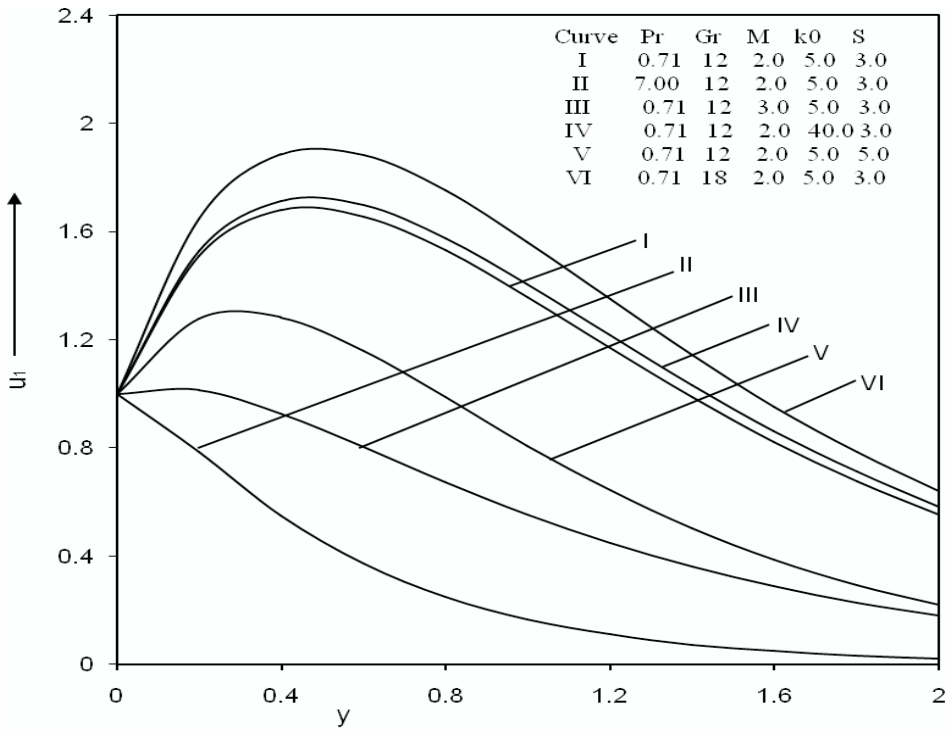

Fig. 2:Effects of Pr, M, k0, S and Gr on the Time Dependent Part of Velocity Field

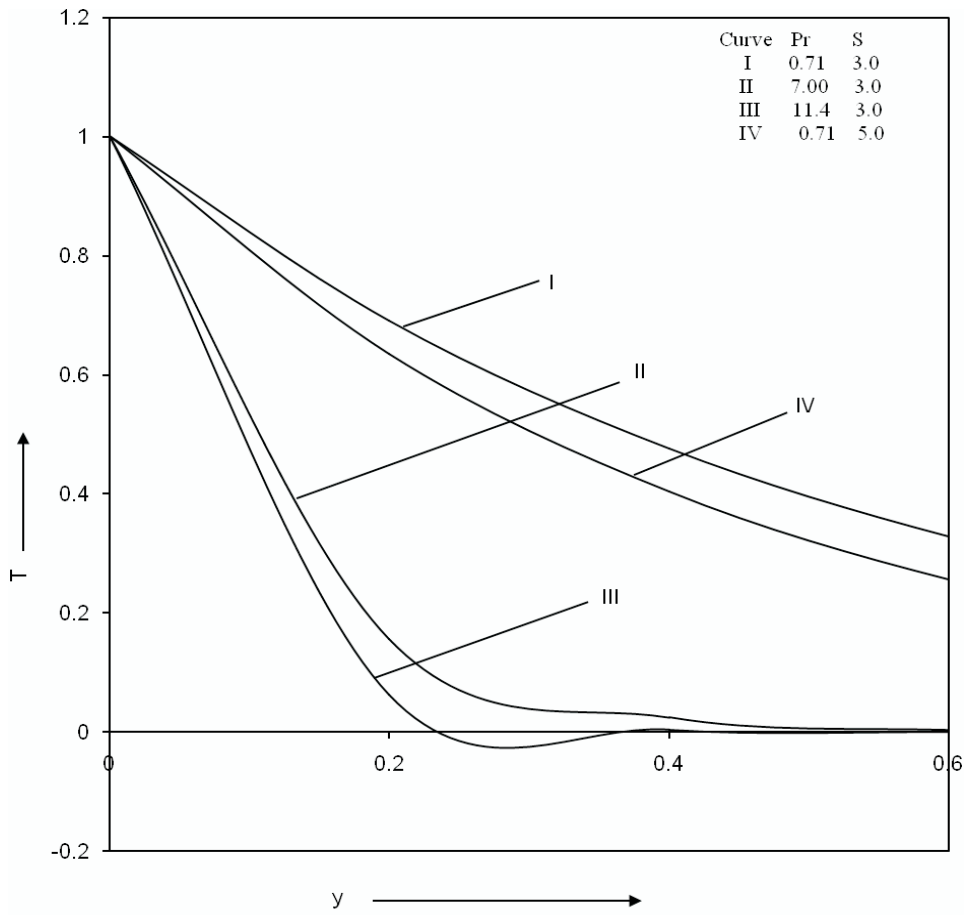

Fig. 3: Temperature Field for diffrent values of Prandtl Number and Heat Source Parameter

ISSN : 2349-2597

Amoebiasis : A Review

Dr. Veena Bhalla
P.G. Department of Zoology, DAV College, Sector-10, Chandigarh.
bhallaveena7@gmail.com

Abstract

Entamoeba histolytica with worldwide distribution is still a major threat to public health in developing countries. It is ranked as second leading cause of deaths from parasitic diseases. The life cycle of parasite is simple having two forms; infective form the cyst and vegetative form the trophozoite, with man being the most optimum host. The route of human infection is from faecal oral transmission, either directly by person-to-person contact or indirectly by eating or drinking faecally contaminated food or water. E. histolytica, the causative agent of amoebiasis is associated either with or without clinical manifestations. Laboratory diagnosis of amoebiasis is usually done by microscopic examination and is supplemented by serological methods as and when required. Drugs with azol compounds such as metronidazole is the choice of drug used in treatment. Vaccination against amoebiasis is still at clinical stages. This review describes the protozoan parasite, epidemiology, pathology, diagnosis, treatment and control measures of parasitic disease of national and international significance.

Key words : Entamoeba histolytica, Amoebiasis, Amoebic colitis

Introduction

Several protozoan species in the genus Entamoeba infect humans, but not all of them are associated with disease. Entamoeba histolytica is well recognised as a pathogenic amoeba, associated with intestinal and extra intestinal infections (WHO, 1997). The other species are important because they may be confused with E. histolytica in diagnostic investigations (Gracia and Bruckner, 1997). Cysts are passed in faecal contaminated food, water or hands. Excystation occurs in the small intestine and trophozoites are released, which migrate to the large intestine. The trophozoites multiply by binary fission and produce cysts, which are passed in the faeces. Due to protection conferred by their walls, the cysts can survive days to weeks in the external environment and are responsible for transmission. Trophozoites can also be passed in diarrheal stool, but are rapidly destroyed once outside the body, and if ingested, would not survive exposure to gastric juices (Chatterjee, 1969). In many cases, the trophozoites remain confined to intestinal lumen (non-invasive infection) of individuals who are asymptomatic carriers, passing cysts in the stool. In some patients, the trophozoites invade the intestinal mucosa (intestinal disease), or through the bloodstream, extra intestinal sites such as liver, brain and lungs (extra intestinal disease), with resultant pathologic manifestations (Raza et al., 2013). It has been established that the invasive and non-invasive forms represent two separate species, respectively, E. histolytica and E. dispar, however not all persons infected with E. histolytica will have invasive disease (El-Kadi, 2006). These two species are morphologically indistinguishable.

Geographic Distribution

Worldwide, with higher incidence of amoebiasis is in developing countries. In industrialized countries, risk groups include male homosexuals, travellers, recent immigrants, and institutionalized populations (Quinn, et al., 1983, Stanley, 2003). Amoebiasis affects about 15% of Indian population with difference in prevalence in different regions. According to Ximenez et al., 2011, intestinal amoebiasis is wide spread in the tropics, but the prevalence of invasion and incidence of the disease show geographical variation, probably because of transmission and invasiveness that vary with ecological and social conditions.

Disease Pathology

Amoebiasis is a disease caused by microscopic parasite E. histolytica that attach to the large intestine. Most of the time these parasites (amoebas) cause no symptoms and are frequently auto limited at different periods of time (Kretschmer,1990), but in up to 8% of those infected, the amoebas invade deeply into the walls of the intestine When this happens, the symptoms begin, either because the amoebic parasites attack the intestinal mucosa resulting in Intestinal amoebiasis / amoebic colitis or more rarely, spread through the body to affect other organs , especially the liver (Stanley, 2003). The mechanisms involved in host parasite interactions resulting in onset of disease state highlight the role of three virulence factors. These are surface proteins of parasite (lectin), cytoproteins (cysteine proteases) and ameobapore (Stauffer and Ravdin, 2003).

Galactose/N-acetylgalactosamine specific lectin, a complex of a disulphide-linked 170 kDa and 35/31 kDa subunits, and an associated 150 kDa protein binds to N-terminal galactose or N-acetylgalactosamine residues on mammalian cells as prerequisite for cell-cell contact in the killing process (Li et al.,1988,1989, Mann 2002).Molecular events illustrate that upon binding of trophozoites to intestinal epithelial cells results in immediately seize in their mobility, loss of cytoplasmic granules and structures and finally the nucleus (Regland et al ., 1994). Amoebapores, peptides capable of forming pores in lipid bilayers bring about cytolysis as well as apoptosis since sublytic concentrations of pore-forming proteins can induce apoptosis in target cells. Structurally these are related to granulysins and NK-lysins produced by mammalian T cells (Leippe,1997). E histolytica trophozoites can also kill mammalian cells by induction of programmed cell death (Regland et al., 1994). Increase in calcium level is trigger for execution of apoptosis (Ravdin et al., 1977). Thus virulence of E histolytica is associated with both the apoptosis and phagocytic ability of trophozoites to limit the host inflammatory response (Huston et al., 2003).

Various studies have reported the role of cysteine proteinases in invasion and inflammation of the gut. So far, seven distinct genes encoding pre-pro forms of papain-family proteinases have been identified (Que and Reed, 2000). These proteinases digest extracellular matrix proteins, which might facilitate trophozoite invasion into and within the submucosal tissues and help amoeba in avoiding inflammatory response of host (Que and Reed, 1997). Of the proteinases secreted by E. histolytica trophozoites, large quantities of cysteine proteinases are seen extracellularly in amoebic liver abscesses in animals (Leippe, 1995, Stanley et al., 1995). Bruchhaus et al., 1996 reported that E.histolytica trophozoites can secrete 10–1000 times more cysteine proteinases than E. dispar, but genetically engineered over expression of cysteine proteinases in E. dispar does not confer virulence (Hellberg et al ., 2001).

When amoebas spread through the blood stream to other parts of the body, they can cause pockets of infection and pus in different organs. About 1% of the time, they infect the liver, and the condition is called hepatic amoebiasis. Symptoms of hepatic amoebiasis include fever, pain in the abdomen, an abnormally swollen and enlarged abdomen and tenderness in the right hypochondrium, below the right ribs (Stauffer, 2003)

A child with intestinal amoebiasis may complain of abdominal pain that begins gradually. There may also be diarrhoea, which is blood stained or filled with mucus. The child may have 8-10 bowel movements each day and may experience a constant nagging and irritating feeling. There is fever about one third of the time. In rare cases, amoebiasis causes an amoebic dysentery, with sudden symptoms of fever, chills and severe diarrhoea. This can lead to dehydration (abnormally low levels of body water). Symptoms can last from a few weeks to several weeks (Haque, 2006).

Clinical Features

A wide spectrum of clinical manifestations from asymptomatic infection (luminal amoebiasis) to invasive intestinal amoebiasis (dysentery, colitis, appendicitis, toxic mega

colon, amebomas), to invasive extra intestinal amoebiasis such as liver abscess, peritonitis, pleuropulmonary abscess, cutaneous and genital amoebic lesions (Kretschmer RR,1990).

Diagnosis

I. Laboratory Diagnosis

E. histolytica must be differentiated from other intestinal protozoa including E.coli, E. hartmanni, E. gingivalis, Endolimax nana and Iodamoeba huetschlii (the non pathogenic amoebas), Dienamoeba fragilis (which is a flagellate not an amoeba) and possibly the pathogenic E. polecki. Differentiation is possible but not always easy, based on morphologic characteristics of the cysts and trophozoites (Tanyukesl, 2003). The non pathogenic E. dispar, however, is morphologically identical to E.histolytica, and differentiatiation must be based on isoenzymatic and immunologic analysis. Molecular methods are useful in distinguishing between E. histolytica and E. dispar and can also be used to identify E. polecki (Clark, 1992). Microscopic identification of cysts and trophozoites in the stool is the common method for diagnosing E. histolytica (Biagi and Portilla,1957). This can be accomplished using:

a) . Fresh stool: wet mounts and permanently stained preparations (e.g. Trichrome)

b). Concentrates from fresh stool: wet mounts, with or without iodine stain, and permanently stained preparations (e.g. Trichrome). Concentration procedures however, are not useful for demonstrating trophozoites.

In addition, E. histolytica trophozoites can also be identified in aspirates or biopsy samples obtained during colonoscopy or surgery (Petri and Singh, 1999).

II. Immunodiagnosis

a). Antibody Detection

Enzyme immunoassay (EIA) kits for E. histolytica antibody detection as well as kits for antigen detection are commercially available (Ali, 2008). Antibody detection is most useful in patients for with extra intestinal disease (i.e. amoebic liver abscess) when organisms are not generally found on stool examination. The indirect Hemaggulutination (HIA) test has been replaced by commercially available EIA kits for routine serodiagnosis of amoebiasis (Haque et al., 2000). Antigen consists of a crude soluble extract of axenically cultured organisms. The EIA test detects antibody specific for E. histolytica in approximately 95% of patients with extra intestinal amoebiasis, 70% of patients with active intestinal infection, and 10% of asymptomatic persons who are passing cysts of E.histolytica. If antibodies are not detectable in patients with acute presentation of suspected amoebic liver abscess, a second specimen should be drawn 7-10 days later. If second specimen does not show seroconservation, other agents should be considered. Detectable E. histolytica specific antibodies may persist for years after successful treatment so the presence of antibodies does not necessarily indicate acute or current infection. Specificity is 95% or higher; false positive reactions rarely occur. Although the immunodiffusion test is as specific, it is slightly less sensitive than the IHA and EIA and requires a minimum of 24 hrs to obtain a result. However the simplicity of the procedure makes it ideal for the laboratory that has only an occasional sample for testing. The IHA and EIA tests are more suitable for laboratories that have frequent request for amoebiasis serology. Although detection of IgM antibodies specific for E. histolytica has been reported, sensitivity is only about 64% in patients with current invasive disease (Pillai et al., 1999).

b). Antigen Detection

Antigen Detection may be useful additional assay in diagnosing infection. Improved sensitivity and specificity of faecal antigen assays with the use of monoclonal antibodies, which can distinguish between E. histolytica and E. dispar infections (Gonzalez 1992, 1994).

III. Molecular Diagnosis

In reference diagnosis laboratories, PCR is the method of choice for discriminating between the pathogenic species (E. histolytica) from the non pathogenic species, E. dispar (Pillai et al.,1999).

Currently, the most sought after diagnostic test is a novel one-step, closed-tube, loop-mediated isothermal amplification (LAMP) assay for detecting Entamoeba histolytica was developed by Liang et al., 2009. The sensitivity of the LAMP assay is 1 parasite per reaction. LAMP is a rapid, simple, and valuable diagnostic tool for epidemiological studies of amoebiasis.

IV. Additional Diagnostic Methods

Radiography (Bluemencranz et al.,1983), Ultrasonography (Ralls et al.,1982), Computed tomography (CT) and Magnetic resonance imaging (MRI) can be used for detection of liver abscess, cerebral amoebiasis (Radin et al.,1988).

Treatment

Amoebiasis treatment is broadly based on the eradication of amoebae by the use of amoebicides, replacement of fluid, electrolyte and blood and relief from constitutional symptoms (Petri 2003, Pritt 2008) Amoebae may be found in the lumen of intestine, in the intestinal submucosa or in the extraintestinal sites such as the liver, lungs etc. The amoebicidal drugs depending on their sites of action can be grouped as follows:

Luminal Amoebicides

They act on the amoebic trophozoties present in the lumen of the bowl and are ineffective against tissue amoebae. These include Diloxanide furoate and Di-iodohydrxyquinoline (Stanley, 2003)

Tissue Amoebicides

They act on tissue amoebae and include: metronidazole, tinidazole, emetinehydrochloride and 2-dehydroemetine (Powel et al., 1969). Amoebicides, which act only on liver tissue is chloroquine. Tetracycline and erythromycin act on the intestinal wall (Arora and Arora , 2014).

Prevention And Control

Amoebic infections can be controlled and prevented by adopting both individual prophylaxis and community prophylaxis measures that interrupt the faecal -oral spread of the infectious cyst stage of parasite (William, Petri and Singh1999).

I. Individual prophylaxis consists of

1. Avoiding faecal contamination of water and food.
2. Boiling the drinking water to kill the amoebic cysts.
3. Treating vegetables with acetic acid and vinegar at least 20 minutes before consumption as salad.
4. In homosexuals, by avoiding sexual practices that allow faeco- oral contact.
5. Improved personal hygiene such as washing hands.
6. Elementary hygienic practices should be propagated and constantly reinforced in schools, health care units, and the home through periodic campaigns using the mass media.

II. Community prophylaxis consists of

1. Improvement of general sanitation by proper disposal of faeces.
2. Prevention of water supplies from faecal contamination.
3. Better management of cases by an early and rapid detection and subsequent treatment of cases.
4. By uplifting general social and economic development.

Conclusion

With such an adverse effects of amoebiasis on human health, efforts on creating public awareness on all aspects associated with this disease and further studies focussing on interactions of microorganisms in the intestinal microenvironment may help in reducing the

ase. Such approach may have positive impact in clinical and laboratory diagnosis of diarrheic syndrome and its treatment. Genotyping of isolates from individuals with various clinical manifestations in different regions of the world will help to establish whether particular strains are associated with colitis, liver abscess, or colonisation. The nearly completed E. histolytica genome project will complement these efforts by identification of other genes that encode key virulence factors.

References

- Ali I.K., Clark C.G., and Petri Jr. W.A. (2008a). Molecular epidemiology of amebiasis. Infect. Genet. Evol., 8, 698–707
- Arora D.R. and Arora B.B(2014). Protozology. In :Medical parsitology . Fourth Ed.pp. 17-40.
- Biagi F and Portilla J. (1957). Comparison of methods of examining stool of parasites. Am. J. Trop. Med. Hyg. 6, 906-11
  Blumencranz H, Kasen L, Romeu J, Waye JD, LeLeiko NS. (1983). The role of endoscopy in suspected amoebiasis. J Gastroenterol, 78, 15–18.
- Bruchhaus I, Jacobs T, Leippe M, Tannich E. (1996). Entamoeba histolytica and Entamoeba dispar: differences in numbers and expression of cysteine proteinase genes. Mol Microbiol, 22, 255–63.
- Chatterjee K.D. (1969). Class Rhizopoda:order Amoebida. In: Parasitology, Protozoology and Helminthology. Seventh Ed. pp 9-36.
- Clark GC, Diamond LS.(1992). Differentiation of pathogenic Entamoeba histolytica from other intestinal protozoa by riboprinting. Arch Med Res. 23,15–8.
  Clark, C.G.(1998) . Entamoeba dispar, an organism reborn. Trans. R. Soc. Trop. Med. Hyg., 92, 361–364
- El-Kadi M.A., Dorrah O.A., and Shoukry N.M.(2006). Patients with gastrointestinal complains due to enteric parasites, with reference to Entamoeba histolytica/ Entamoeba dispar as detected by ELISA E. histolytica adhesion in stool. J. Egypt Soc. Parasitol., 36: 53–64
  Garcia L.S., and Bruckner D.A.(1997). Diagnostic Medical Parasitology. 3rd Ed., ASM Press, Washington, D.C., USA
  Garcia L.S., and Bruckner D.A. (1999),.Taxonomy and classification of human parasites, In: Murray P.R., Baron E.J., Pfaller M.A., Tenover F.C., and Yolken R.H., (eds.), Manual of Clinical Microbiology, 7th Ed., ASM Press, Washington, D.C., USA
  Gonzalez-Ruiz A, Haque R, Rehman T, Aguirre A, Hall A, Guhl F, et al., (1994) Diagnosis of amoebic dysentery by detection of Entamoeba histolytica faecal antigen by an invasive strain-specific, monoclonal antibody-based enzyme-linked immunosorbent assay. J Clin Microbiol.,32, 964–70.
- Gonzalez-Ruiz A, Haque R, Rehman T, Aguirre A, Jaramillo C, Castañon , et al .,(1992). A monoclonal antibody for distinction of invasive and non-invasive clinical isolates of Entamoeba histolytica. J Clin Microbiol., 30, 2807–13.
- Haque R, Mollah NU, Ali IK, et al ., (2000). Diagnosis of amoebic liver abscess and intestinal infection with the TechLab Entamoeba histolytica II antigen detection and antibody tests. J Clin.Microbio.38:3235–39.
  Haque R., Mondal D., Duggal P., Kabir M., Roy S., Farr B.M., Sack R.B., Petri Jr W.A., (2006). Entamoeba histolytica infection in children and protection from subsequent amoebiasis. Infect. Immun., 74, 904-909.
- Hellberg A, Nickel R, Lotter H, Tannich E, Bruchhaus I. (2001). Overexpression of cysteine
- Huston C.D., Boettner D.R., and Miller-Sim V.,(2003). Apoptotic killing and phagocytosis of host cells by the parasite Entamoeba histolytica. Infect. Immunol., 71: 964–972
- Kretschmer RR. (1990). Amoebiasis: Infection and Disease by Entamoeba histolytica. Boca Raton: CRC Press;. pp. 59–60.
- Leippe M. (1997). Amoebapores. Parasitol Today , 13: 178–83.
- Leippe M, Sievertsen HJ, Tannich E, Horstmann RD.(1995) .Spontaneous release of cysteine proteinases but not of pore-forming peptides by viable Entamoeba histolytica. Parasitology, 111, 569–74.
- Li E, Becker A, Stanley SL Jr. (1988). Use of Chinese hamster ovary cells with altered glycosylation patterns to define the carbohydrate specificity of Entamoeba histolytica adhesion. J Exp Med, 167, 1725–30.
- Liang Shih-Yu, Yun-Hsien Chan, Kan-Tai Hsia, Jing-Lun Lee, Ming-Chu Kuo, Kuo-Yuan Hwa, Chi-Wen Chan, Ting-Yi Chiang, Jung-Sheng Chen, Fang-Tzy Wu, and Dar-Der Ji.(2009). Development of Loop-Mediated Isothermal Amplification Assay for Detection of Entamoeba histolytica. Journal of Clinical Microbiology, 47,1892–1895,

- Mann BJ. (2002). Structure and function of the Entamoeba histolytica Gal/GalNAc lectin. Int Rev Cytol ,216 , 59 –80 .
  Petri Jr. W.A.,(2003). Therapy of intestinal protozoa. Trends Parsitol., 19: 523-526
  Petri Jr. W.A., and Singh U., (1999). Diagnosis and management of amoebiasis, Clin. Infect. Dis., 29, 1117–1125
- Pillai DR, Keystone JS, Sheppard DC, et al., (1999). Entamoeba histolytica and Entamoeba dispar: epidemiology and comparison of diagnostic methods in a setting of nonendemicity. Clin Infect Dis.,29, 1315–18.
  Powell S.J., Wilmot A.J., Elsdon-Dew R., (1969). Single and low dosage regimens of metronidazole in amoebic dysentery and amoebic liver abscess, Ann. Trop. Med. Parasitol., 63, 139–142 .
  Powell S.J., MacLeod I., Wilmot A.L., and Els-don-Dew E., (1966). Metronidazole in amoebic dysentery and amoebic liver abscess. Lancet, 2, 1329-1331
- Pritt BS, Clark CG.(2008) . Amoebiasis. Mayo Clin Proc. 83, 1154–9.
  Quinn TC, Stamm WE, Goodell SE, Mkrtichian E, Benedetti J, Corey L, et al. (1983). The polymicrobial origin of intestinal infections in homosexual men. N Engl Med. 309,576–82.
- Que X, Reed SL.(2000). Cysteine proteinases and the pathogenesis of amoebiasis. Clin Microbiol Rev., 13: 196–206.
- Que X., and Reed S.L.,(1997) . The role of extracellular cysteine proteinases in pathogenesis of Entamoeba histolytica invasion. Parasitol. Today, 13:190–194
- Quinn TC, Stamm WE, Goodell SE, Mkrtichian E, Benedetti J, Corey L, et al., (1983). The polymicrobial origin of intestinal infections in homosexual men. N Engl J Med. 309:576–82.
  Leippe M., Ebel S., and Schoenberger O.L., (1991). Pore- forming peptide of pathogenic Entamoeba histolytica. Proc, Natl Acad. Sci. USA, 88, 7659–7663
  Que X., and Reed S.L., (1997). The role of extracellular cysteine proteinases in pathogenesis of Entamoeba histolytica invasion. Parasitol. Today, 13,190–194
- Radin DR, Ralls PW, Colletti PM, Halls JM. (1988). CT of amoebic liver abscess. Am J Roentgenol .150, 1297–301.
- Ralls PW, Colletti PM, Quinn MF, Halls J. (1982). Sonographic findings in hepatic amoebic abscess. Radiology, 145, 123–26.
- Raja et al., (2013). Amoebiasis a major risk to human health: A Review. Intl . journal of Molecular Medical Science., 3, 313-324.
- Ravdin J.I., and Guerrant R.L., (1981). The role of adherence in cytopathogenic mechanisms of Entamoeba histolytica; Study with mammalian tissue culture cells and human erythrocytes., J. Clin. Invest., 68,1305–1313
- Ravdin J.I., Moreau F., Sullivan J.A., Petri Jr W.A., and Mandell G.L., (1988). The relationship of free intracellular calcium ions to the cytolytic activity of Entamoeba histolytica.Infect.Immunol.,56,1505–1512 .
- Ravdin JI. (1989). Immunobiology of human infection. Pathol. Immunopathol Res., 8, 179-205.
- Ravdin JI, Stanley P, Murphy CF, Petri WA. Jr. (1989). Characterization of cell surface carbohydrate receptors for Entamoeba histolytica adherence lectin. Infect Immun., 57, 2179–86.
  Stanley Jr. S.L., (2000). Prevention and potential of new interventions, In: Ravdin J.I., ed., Amoebiasis, Imperial College Press, London
- Stanley S.L., (2003). Amoebiasis. Lancet, 361, 1025–1034.
- Stauffer W., and Ravdin J.I., (2003). Entamoeba histolytica: An update, Current Opin. Infect. Dis.,16,479–485
  Tanyuksel M., and Jr. Petri W.A., (2003). Laboratory diagnosis of amoebiasis.Clin.Microbiol.Rev.,(4),713-729
- William. A, Petri Jr. and Singh U. Diagnosis and management of Amebiasis (1999). Clinical infectiousDisease,29,1117-1125
  World Health Organization, (1985). Amoebiasis and its control, Bull. WHO, 63, 417–426
  World Health Organization, (1997). Amoebiasis, Weekly Epidemiol. Rec., 72: 97–99
- www.ncbi.nih.gov
- www.cdc.gov
- www.emedicine.medscape.com
- Ximénez C, Morán P, Rojas L, Valadez A, Gómez A, Ramiro M, Cerritos R, González E, Hernández E, Oswaldo P. (2011). Novelties on Amoebiasis: A Neglected Tropical Disease
- J Glob Infect Dis., 3(2), 166-74.

ISSN : 2349-2597

Environmental Security Considering Human Security: Thought, Conflict, Co-operation And Importance

***Dr. Samar Vir Singh Rathore, **Vidhu Grace Noel**
*Department of Zoology, St. Johns College, M. G. Road, Agra
**Department of Commerce, St. Johns College, M. G. Road, Agra

Abstract
Environmental security got international community concern likewise as the academic one. Environmental security, a comparatively new and still somewhat contentious idea, may be outlined as the intersection of environmental and national security concerns at a national policy level. There is growing agreement that environmental degradation can and will trigger, amplify or cause conflict and instability, and a growing concern that environmentally evoked conflict would possibly increase. Today, security establishments are being known as upon to shield access to the environmental product in different countries similarly as within the world commons, and to supply support for humanitarian operations, several of that have important environmental roots. Within the future, the force could also be employed in response to transboundary pollution, or to enforce the international environmental law. However, security specialists recognize that conflict is often a constructive force, signaling the requirement for institutional modification or capacity building.These trends recommend that environmental security could also be a vital evolution of national state and international policy systems

Keywords: Environmental Security, Conflict, Importance, Issues

1. Genesis of Environmental Security

Since the late five decades, there has been associated current discourse with respect to the connections between environment, resources, security, conflict, and peacemaking. These connections bit by bit became additional accepted among Institutions and NGOs, but were met with bigger reservation by policymakers.

By the mid-1990s, Henry M. Robert Kaplan still felt compelled to lament: “Mention ‘the environment’ or ‘diminishing natural resources’ in foreign-policy circles and you meet a brick wall of disbelief or dissatisfaction” (Kaplan, 1994).

During the latter years of the Nineteen Nineties, environmental problems did begin to seek out an area within the arena of sensible foreign and security political. Then, new difficulties arose in the wake of the attacks of eleven September 2001; within the USA. Wherever policy-makers had begun to embrace notions of environmental security within the Nineteen Nineties, the “war on terror” has taken center stage, and for the most part brought these early efforts to a halt.

The study of however environmental problems and peace and security issues act as much from a monolithic endeavor completely different writers have targeted on different aspects at intervals the spectrum of connections. Some have targeted fairly narrowly (i.e., limiting their inquiry to the connections between surroundings and also the incidence of violent conflict) others have drawn so much broader boundaries (i.e., adopting a broader surroundings and security approach). a number of the writing has targeted on the impact of environmental change on the national security of a selected state, whereas different efforts are primarily involved with the implications for international security.

2. Concept of Environmental Security- The relationship between environment and security has been into consideration since the Nineteen Eighties primarily by two groups: (1) the

environmental policy community, addressing the security implications of environmental amendment and security, and (2) the security community, observing new definitions of national security, significantly within the post-Cold War era.

It was shortly acknowledged that international impacts of for example environmental amendment, the depletion of the ozone layer and trans-boundary pollution, have clear security implications. This successively created the military authorities to re-evaluate the security dimension of environmental problems.

Security was historically seen as a word for national security with two main objectives: (1) to preserve the territorial integrity of the State and (b) to maintain the popular kind of government, by political and military means that.

Academicians took up the environmental aspect of security; they outlined setting impacts as being a part of the protection issue. This approach attempted to redefine the construct of national security fully. Within the early Nineteen Eighties, the Independent Commission on Security and Disarmament problems (ICSDI) developed and introduced the construct of common security, giving the idea of national security a broader perspective(Homer et al., 1991).

Additional to the normal security aspects, other non-traditional threats to security, e.g. economic decline, social and political instability, ethnic rivalries and territorial dispute, terrorist act, money laundering and Narco-traffic yet as environmental stress, are incorporated.

The World Commission on setting and Development clearly coupled security with the environment in its 1987 Brundtland Report: “Humankind faces nice threats; the primary is that of a nuclear exchange. Allow us to hope that it remains a diminishing prospect for the longer term. The second is that of environmental ruin worldwide and much from being a prospect for the longer term; it's a really straight away”.(Brundtland et al., 1991).

Following this inter-linkage, the final Assembly officially introduced the construct of security and environment at its forty-second Session. In recent years environmental security has been understood extensively, together with human, physical, social and economic well-being, giving the scope hardly any limitation for interpretations (CCMS, 1999).

At present, however, there's no accord on a transparent definition of environmental security. For the aim of this paper, the scope of the difficulty is limited on however environmental impacts could have an effect on conflicts, environmental stress could also be a cause yet as a result of a conflict.

3. Conflict:

Conflict is the more easily defined the two terms, though not without its own set of challenges. A basic distinction needs to be made between armed conflict and disputes that are largely carried out by non-violent means. This is not an absolute distinction: non-violent struggles may at some point turn violent, and vice versa. And conflicts often do not have a well-defined start and end point, as formal declarations of war and even formal peace agreements are becoming rare.

It is essential to recognize the terms struggle what’s more, security. Struggle, and particularly fierce clash, is an exact and noticeable wonder. Security, on the other hand, is a subjective and socially-built recognition that advances and depends to a great extent on the point of view of the substance (singular, gathering, state, worldwide, or transnational) being secured or potentially giving security. Strife is a condition normally considered a risk to security. Consequently the terms are regularly treated together however ought not to be considered synonymous. The Heidelberg Institute for International Conflict Research in Germany has identified 249 political conflicts around the world that were active in 2005. Of these, 24 involved a high level of armed violence and 74 some occasional violence. The remainder

86 "manifest conflicts" and 65 "latent conflicts"—were carried out without resort to weapons (Heidelberg, 2005).

Global environmental problems which will cause conflicts and will need intervention with dedication and cooperation, embody the protection of the ozone layer, the reduction of global warming, the conservation of wildlife and biodiversity, further as curbing population growth, addressing energy vulnerability, promoting sustainable economic development and guaranteeing the great management of the global commons (Jeong, 2000). Moreover, whereas the term environmental conflicts include a broad scope of potential conflicts associated with the environment, there also are varied conflicts joined to specific resources, like water, land or fisheries. These conflicts are also cited as resource conflicts.

Violence over fresh water has a long and distressing history. In recent years, there has been an increase in reported cases of water-related disputes and violence. water wars focus on transnational, or interstate, disputes, while there appears to be a growing threat of subnational, or intrastate, water conflicts. This distinction is further discussed and analyzed below, but we note that the prevalence and availability of international mechanisms to reduce the risks of interstate conflicts may offer little or no help in the area of intrastate conflicts. Although linkages between water scarcity and conflict have received a great deal of attention, both in qualitative case studies as well as quantitative studies, the relationship remains unclear since the literature has generally not considered the effectiveness of governance. Many scholars argue that water scarcity can promote violent intrastate conflict. Water is life and scarcity of water with dispute could lead to deadly consequence on Health, Hunger, Education, and Poverty. When people will be forced to drink low quality water from flowing streams, many of which are contaminated. There are many water-borne diseases that people die off. Lack of water or quality water causes huge sanitation issues. Clinics, local restaurants, public places of convenience and many other places are forced to use very little water for cleaning. This compromises the health of the staff and people who use the facilities. Less water means farming and other crops that need water to grow have a lower yield. It means farm animals will die and others will not do well without water. The result is constant hunger and thirst and low quality of life. Access to quality water is key to economic prosperity and better living standards. Businesses and schools thrive when people come to work on time and not have to spend all morning looking for water. Restaurants, hotels and shopping places need to keep clean to attract tourists and foreign investments. Manufacturing activities, commercial farms, and mining processes all need a lot of water to thrive. Lack of water means no economic activities will happen and the people will be in constant poverty.

ENCOP,Environment and Conflicts Project (ENCOP) which is a co-supported by the Center for Security Studies and Conflict Research of the Swiss Federal Institute of Technology and the Swiss Peace Foundation outlines environment conflict ,these conflicts show themselves as political, social, financial, ethnic, religious or regional clashes, or clashes over assets or national interests, or some other sort of contention. They are customary clashes incited by environmental degradation. Environmental clashes are described by the primary significance of corruption in at least one of the accompanying fields: abuse of inexhaustible assets, over strain of the earth's sink limit (contamination); or impoverishment of the space of living (Libiszewski, 1992:13).

4. Importance:

To the extent human beings neglects to take care of the globe's life-supporting eco-systems generating water, food, medicine, and clean air, current and future generations are going to be confronted with progressively severe instances of environmentally induced changes.

Such events will check our ancient ideas, boundaries, and understandings of national security and alliance politics and, if taken without any consideration, might result in conflict, as well as violent conflict, from the worldwide to the regional, national, native or human level.

Environmental security, generally outlined, effects world and its institutions and organizations

5. Conclusion:

Sustainable use of natural resources and joint efforts to safeguard the setting across national borders and social divisions will contribute to conflict hindrance and peacebuilding. for example, the predictions of future wars over access to water have up to now did not come back true. On the contrary, numerous kinds of cross-border water cooperation are contributory to stability and peace in regions of latent conflict.

Environmental change is the world's first really worldwide synthetic ecological issue and a firm cautioning that human exercises can impact our physical condition on a worldwide scale. The scope of conceivable outcomes of environmental change is so wide, notwithstanding for the restricted temperature changes anticipated in the IPCC scenarios, that it is hard to deal with the primary needs.

Weapons don't essentially offer security— and will even heighten insecurity. This can be true for adversarial states armed with weapons of such damaging power that no defense is feasible. It's true in civil wars, wherever the simple accessibility of weapons empowers the merciless however offers very little defense for civilians. Real security in an exceedingly globalizing world cannot be provided on a strictly national basis, or perhaps on basis of restricted alliances. A tripartite and even international approach is required to deal effectively with a mess of Trans-boundary challenges. The ancient focus on state (or regime) security is insufficient and needs to include safety and well-being for the state's population. If people and communities are insecure, state security itself may be extraordinarily fragile. Democratic governance and a vivacious civil society might ultimately be a lot of imperative for security than a military. Non-military dimensions have a vital influence on security and stability. Nations around the world, however notably the weakest ones, confront a mess of pressures. They face a debilitating combination of rising competition for resources, severe environmental breakdown, the betterment of infectious diseases, financial condition and growing wealth disparities, demographic pressures, and joblessness and living insecurity.

The human security idea has been criticized by a variety of analysts as being too sweeping and analytically unfocused. Critics have charged that the inclusion of a large array of social, economic, and environmental ailments makes it troublesome to line priorities and translate the idea into specific policies.

The investigation of the connection between environmental change and strife has progressed recognizably in the previous five years. As to how changes in precipitation may impact inner clash, the one zone where we now have a reasonable number of studies, the overwhelming perspective is by all accounts that precipitation plenitude is related with more serious dangers than a dry season and that regardless other clash creating factors are more vital. Investigations of how environmental change may advance interstate clash over water assets additionally appear to point toward a feeble or an invalid relationship.(Gleditsch,2012)

In recent reviews of this literature, Bernauer, Thomas et al (2012) and Theisen (2017) conclude that although environmental change may under certain circumstances increase the risk of violent conflict, the existing evidence indicates that this is not generally the case.

Human security as 'freedom from hazard impact' is achieved once people that are prone to these manifold environmental hazards and disasters (floods, landslides, and drought) usually intensified by different associated societal threats (poverty), challenges (food insecurity), vulnerabilities and risks (improper housing in extremely vulnerable flood-prone and coastal areas) are higher warned of at hand hazards, prepared, and protected against these impacts and are authorized to prepare themselves effectively to avoid and to cope with the 'survival dilemma' that usually happens during conflicts, natural hazards, and in complicated emergencies wherever each coincide

There is definitely an immediate need for solid research on environmental change and human security

6. References

1. Bernauer, Thomas, et al. "Environmental changes and violent conflict." Environmental Research Letters, vol. 7, no. 1, 2012, p. 015601., doi:10.1088/1748-9326/7/1/015601.
2. Gleditsch NP. Whither the weather? Climate change and conflict. Journal of Peace Research. 2012;49(1):3-9. doi:10.1177/0022343311431288.
3. Heidelberg Institute for International Conflict Research, Conflict Barometer 2005 (University of Heidelberg, Germany: December 2005), p. 3.
4. Jeong, Ho-Won. 2000. *Peace and conflict studies: An introduction*. Burlington: Ashgate
5. Libiszewski, S. 1992. What is an Environmental Conflict? Environment and Conflicts Project (ENCOP), Occasional Paper No. 6. Zurich: Center for Security Studies and Conflict Research.
6. NATO/CCMS, *Environment and Security in an International Context*, Final Report (March 1999).
7. Report of Brundtland Commission on environment and development (1987).
8. Robert D. Kaplan, "*The Coming Anarchy*," Atlantic Monthly, February 1994.
9. T.F. Homer-Dixon, On the Threshold: *Environmental Changes as Causes of Acute Conflict in: International Security*, Vol. 16, No. 2 (fall 1991), pp. 76-116.
10. Theisen, Ole Magnus, et al. "Is climate change a driver of armed conflict?" SpringerLink, Springer Netherlands, 3 Jan. 2013, link.springer.com/article/10.1007/s10584-012-0649-4. Accessed 12 Sept. 2017.

ISSN : 2349-2597

Preparation And Characterization Of Mixed Ligand Complexes Of Hydroxamic Acids With Potassium Hexathiocyanato Chromium (iii) Tetra Hydrate

Ajay Agarwal*, Virendra Mishra and Satnam Arora
*B.S.A College of Engg. & Technology, Mathura,

Abstract
Some hydroxamic acids eg. [L1=3,4,5-trimethoxy benzohydroxamic acids (TMBHA), L2= N-phenyl–3,4,5-trimethoxy benzohydroxamic acid (PTMBHA), L3=3,4-dimethoxy benzohydroxamic acid (DMBHA) and L4=N-phenyl-3,4-dimethoxy benzohydroxamic acid (PDMBHA) prepared and reacted with L'=Potassium hexathiocynato chromium (III) tetra hydrate K3[Cr(SCN)6]4H2O. The mixed ligand complexes of hydroxamic acids characterized with the help of repeated melting point identification, by I.R.studies, magnetic moment, molar conductance and by elemental analysis(C, H and N).The geometry of complexes were found to be octahedral .On the basis of these facts the structure of the metal complexes found to be K2 [M(L')4(L1)], K[M(L')2(L2)2], K[M(L')2(L3)2] and K[M(L')2(L4)2].

Keywords:-Hydroxamic acids, Potassium hexathiocynato chromium (III), mixed ligand complexes.

Introduction

Hydroxamic acids were discovered in 1869 by Lossen1. Most of the hydroxamic acids have biological and biocidal activities1-8In recent years it has become evident that these weak acids possesses other type of biological activities9,because the biological activities of hydroxamic acids have been mainly attributed to their complexing properties towards transition metals10-13,food additives, antibiotic, antagonist, tumor inhibitors, antifungal agents,anticancer14-15,antifungal and antibacterial activity16,toxilogical,pharmacological importance17-20 and their –NO releasing properties21. Hydroxamic acids have bivalent coordination mode i.e., through the oxygen of deprotonated hydroxamic acids and through carbonyl oxygen atom (O,O) resulting in the formation of mononuclear complexes22-25.The introduction of secondary coordinating group like thiocynate does not change the coordination behavior of coordination (O,O) as bridging bis-chealating ligand26-27. Very scanty work has been done with the Cr (III) metal with hydroxamic acids. The importance of chromium in mammalian metabolism has been studied greatly. Diet deficient in chromium develops a visible eye lesion, which causes opacity 28-29, hence keeping the above facts in mind; we thought it is worthwhile to isolate some new complexes of hydroxamic acids with Cr (III) and thiocynate group as bridging chelating ligand. Chromium compounds enhanced the action of insulin; outstanding activity is manifested by the chromium complexes extracted from the brewer's yeast and pork kidney powder. These acts as a co-factor in insulin and facilitating the metal –insulin tissues interaction forming ternary complexes. The thiocynate ligand in chromium complexes has shown to enhance the biological activity of the complexes 30, application in pharmaceutical31, in medicines32-33 and industries34-35 and their applications as a biocidal activity has been the subject of studies36-44. The importance of chromium in mammalian metabolism has been studied greatly; Diet deficient in chromium develops a visible eye lesion which causes opacity13.

All reagent and chemicals used were of B.D.H (Anal R) and E.Merck (AR) grade and were used as such45. The solvent supplied by Glaxo (India) were distilled twice under anhydrous conditions before their use.

Analyses And Physical Measurement

Magnetic moments at room temperature (296K) were taken a PARC Model VSM–155 vibrating sample magneto meters under the magnetic field of 7000 gauss produced by a polytronic electromagnetic type HEM -200.The temperature was controlled with the help of cryogenic temperature controller EG and G PARC model -152 .The magneto meter was calibrated with the standard Hg[Co(NCS)4]compound and corrected for diamagnetism of the constituent atoms and the Lucite sample holder with the use of Pascal's constants. Conductance was measured with a Systronics conductivity bridge type 302. The I.R. spectra in the range 4000-200 cm-1 were taken on Perkin Elmer -589 spectrometer using cesium iodide matrixes at slow scanning .The electronic spectra in solution were run on a Beckman Du-64 UV-Visible spectrophotometer. The reflectance spectra were obtained with a Carl Zeiss "SPECOL"spectrophotometer fitted with a reflectance attachment of Rd/O using barium sulphate as standard material. The chromium was determined by Atomic absorption technique on a PLASMA LAB atomic absorption spectrophotometer, Nitrogen by Kjeldhal method and Carbon, Hydrogen analyses by Pregel method.

Preparation Of Potassium Hexathiocyanatochromate (III) Tetrahydrate

Potassium hexathiocyanatochromate (III) tetra hydrate was prepared by the well known method of Roesler46.

A moderately concentrated aqueous solution of six parts of potassium thiocynate and five parts of chrome alum were mixed to each other and were heated for two hours on a steam-bath. The resulting solution was then concentrated in an open dish until the cooled residual liquid solidified to a mass of red crystals. The solid was extracted with absolute alcohol in which the K3 [Cr (SCN)6] was dissolved readily while K2SO4 remained as such in the solution. After evaporation of the filtrate the complex was obtained in the solid form of dark violet colour and was soluble in water and alcohol.

Preparation Of 3, 4, 5-Trimethoxy Benzohydroxamic Acid

The reported hydroxamic acids was prepared by the method of Priyadarshini and Tandon47

An aqueous solution of 10.6 gm [0.1M] of Na2CO3 and 6.15 gm [0.1M] finely powdered hydroxyl amine hydrochloride was taken and this mixture was maintained at about 50C by external cooling using freezing mixture.

11.20 ml [0.1M] 3, 4, 5-trimethoxy benzoyl chloride in diethyl ether [50ml] was added to this drop by drop (about in one hour with constant stirring). After the complete addition of acyl chloride solution, the stirring was continued for further 30 minutes. Almost 80% of the total product was precipitated immediately while the remaining dissolved in ether, which was obtained by distillation of ethereal layer under reduced pressure. The precipitate was washed with Na2CO3 and then with cold water to remove the acidic impurities. Crude 3,4,5-trimethoxy benzohydroxamic acid thus obtained was dissolved in ethyl acetate and then recrystallized 3,4,5-trimethoxy benzohydroxamic acid was obtained by keeping at room temperature as filtered and it was recrystallized by ethyl acetate, and was dried over P2O5 in vacuum desiccators

Average Yield =75%

M.P=1200C.

All the tabulated hydroxamic acid (Table No. 1) prepared by the same method.

Preparation Of Complexes

Methanolic solution of potassium hexathiocyanatochromate (III) tetra hydrate [1M, 50ml] and hydroxamic acids (2M, 60ml) were mixed in round bottom flask. The mixture was refluxed for half an hour on a water bath at 60-700C. On cooling acetone was added to precipitate out red-chocolate coloured complexes. These were filtered, washed well with alcohol and dried in desiccators over anhydrous silica gel. The general reactions of the

interaction of hydroxamic acids with potassium hexathiocynatochromate (III) may be represented as follows:

K3[Cr(SCN)6]4H2O+H-hoxm→ HSCN+KSCN+K2[Cr(SCN)4(hoxm)]
Where hoxm = TMBHA

K3[Cr(SCN)6]4H2O+2H-hoxm→HSCN+2KSCN+K[Cr(SCN)2(hoxm)2].
Where hoxm = PTMBHA, DMBHA and PDMBHA

All the above reported ligand and their mixed ligand complexes are prepared by the same method at different temperature and conditions. (Table No. 1)

Result And Discussion

Magnetic Moment Studies

The magnetic values of the Cr (III) complexes of hydroxamic acids at room temperature (296K) lie in the range of 3.70-3.86 B.M, Which is close to spin value 3.89 B.M for the octahedral complexes47-50. The molar conductances of the complexes were 97-230 ohm-1cm2mol-1 respectively. These values indicates that the presence of one and two ions respectively in the solution of the complexes (Table1).

Electronic Spectra Studies

The electronic spectral data of the mixed ligand complexes of hydroxamic acids with Cr(III) were recorded in dimethyl sulphoxide The electronic spectra of the complexes of hydroxamic acids shows three bands at 17300-17900 cm-1(ν1), 24000 – 25000 cm-1 (ν2) and 37500-38800 cm-1 (ν3) assigned to transition4A2g(F)→ 4T2g(F) (ν1), 4A2g(F) → 4T1g(F) (ν2) and 4A2g(F)→ 4T1g (P) (ν3) transition respectively51. Due to transition these position were found in close agreement with the octahedral band positions for Cr (III) complexes hydroxamic acids52-54. The values of 10Dq, B, β, β35, ligand field stabilization energy (L.F.S.E), experimental band energies as well used various numerical procedure used55-59. The deviatation from the experimental values δ ν = ν cal- ν obs are also given60.The reflectance spectra of the solid complexes and the solution spectra in dimethyl sulphoxide gave the bands at approximately ,the same wave numbers with a deviation of ±20 cm-1 indicating no structural changes on dissolution. The third transition band (ν3) appears as a weak band in the solution spectra .This is not unexpected as this transition is forbidden by g g the selection rule and by other symmetry properties of electronic wave was function of the terms. The intense charge transfer bands and intraligand transition bands commences in the same region and (ν3) appears as shoulder on the large charge transfer band .For the purpose of comparison, the spectra of some reported complexes of Cr(III) in octahedral geometry are also included in Table-2.The spectral assignments are based on energy level splitting originally proposed by Burnum61.The value of 10Dq was directly derived from the first spin allowed band(ν1).The energies of ν2 and ν3 have been calculated using standard equations and also values of B calculated by four

TABLE NO. 1
Chemical Analysis of the Ligand /Mixed Ligand Complexes

S No.	Ligand/ Complexes	Colour	M.P. / Dec. Temp (OC)	Elemental Analysis (%)								μ eff	Molar Conductance (mol-1cm2mol-l)
				Cr		C		H		N			
				Cal.	Obs.	Cal.	Obs.	Cal.	Obs.	Cal.	Obs		
1	TMBHA	Brown	150	-	-	52.86	52.90	5.72	5.79	6.16	6.21	-	-
2	PTMBHA	Light Yellow	170	-	-	63.36	63.38	5.61	5.65	4.62	4.65	-	-
3	DMBHA	White	130	-	-	54.82	54.88	5.58	5.62	5.90	5.97	-	-
4	PDMBHA	Dark Brown	145	-	-	48.38	48.42	5.50	5.55	5.12	5.17	-	-
5*	K2[Cr(NCS)4(TMBHA)] K2[Cr(NCS)4 (C10H12O5N)]	Red	215	8.84	8.90	28.57	28.61	2.04	2.00	11.90	12.00	3.86	230
6*	K[Cr(NCS)2(PTMBHA)2] K[Cr(NCS)2 (C16H16O5N)2]	Reddish Brown	225	6.06	6.04	32.67	32.63	3.96	3.95	6.93	6.98	3.73	98
7*	K[Cr (NCS)2(DMBHA)2] K[Cr (NCS)2 (C9H10O4N)2]	Dark Red	235	8.20	8.24	40.26	40.24	3.69	3.63	9.39	9.40	3.70	100
8*	K[Cr (NCS)2(PDMBHA)2] K[Cr (NCS)2 (C5H14O4N)2]	Brown	260	9.64	9.60	28.34	28.30	5.51	5.47	11.02	11.00	3.72	97

TABLE NO. 2
Electronic Spectral Data and Calculated Transition Energies (cm-1) and Band Positions

Complex No.	Method of calculation	Observed and calculated transition energies (cm-1)			B	β35	δ ν	δ%	L.F.S.E (Kj/mol)
		ν1	ν2	ν3					
1.	Exp	17300	24000	37500					49.62
	(a)	10Dq	Fitted	37845	663	0.643	-345	-0.92	
	(b)	10Dq	23611	Fitted	614	0.596	+389	+1.62	
	(c)	10Dq	23820	37680	640	0.621	±180	+0.75	
	(d)	10Dq	25577	39749	895	0.868	-1577	-0.48, -6.57	
2.	Exp	17500	24000	38000					50.00
	(a)	10Dq	Fitted	38036	636	0.617	-36	-0.094	
	(b)	10Dq	23963	Fitted	631	0.612	+37	+0.154	
	(c)	10Dq	23979	38015	633	0.614	±18	+0.087	
	(d)	10Dq	24500	38500	700	0.679	-500	-0.039 -2.08	

3.	Exp	17800	24200	38500					50.85
	(a)	10Dq	Fitted	38503	620	0.601	-3	+0.007	
	(b)	10Dq	24223	Fitted	626	0.612	-23	-0.095	
	(c)	10Dq	24221	38523	623	0.604	±22	-0.086	
	(d)	10Dq	25751	40099	830	0.805	-1551	+0.059 -6.40	
4.	Exp	17900	25000	38800					51.14
	(a)	10Dq	Fitted	39320	708	0.687	-520	-1.34	
	(b)	10Dq	24427	Fitted	635	0.616	+573	+2.292	
	(c)	10Dq	24730	39064	673	0.653	±267	+1.08	
	(d)	10Dq	26722	41544	971	0.942	-1722	-0.680 -6.888	

TABLE NO. 3
I.R. spectral data of Hydroxamic acids/Mixed ligand complexes (cm-1)

S. No	Ligand/ Complex	Hydroxamic acid/Complexes					Thiocynate							Bond Type
		νC=O	νN-O	νNOH	νO-H	νN-O	νC-N	νC-S	ΔνC-N	ΔνC-S	δNCS	νM-N	νM-O	
1	KSCN	-	-	-	-	-	2049	769	-	-	-	-		
2	K4(Cr(SCN)6	-	-	-	-	--	2100(vs)	N.A	+50	-	-	-		M-S
3	TMBHA	1680	910	1180	3090(S)	910	-	-	-	--	-	-	-	-
4	PTMBHA	1660	910	1160	3140(S)	910	-	-	-	-	-	-	-	-
5	DMBHA	1650	915	1150	3190(S)	915	-	-	-	-	-	-	-	-
6	PDMBHA	1665	920	1170	3050(S)	920	-	-	-	-	-	-	-	-
7	K2[Cr(NCS)4 (TMBHA)]	1630	-	1120	-	-	2080(s)	800(m)	+31	+51	482	390	485	M-N
8.	K[Cr(NCS)2 (PTMBHA)2]	1610	-	1140	-	-	2070(s)	790(m)	+21	+41	485	385	480	M-N
9	K[Cr(NCS)2 (DMBHA)2]	1605	-	1130	-	-	2080(s)	850(m)	+31	+51	480	380	482	M-N
10	K[Cr(NCS)2 (PDMBHA)2	1625	-	1120	-	-	2080(s)	850(m)	+31	+71	482	387	486	M-N

*7, 8, 9 and 10 are mixed ligand complexes.

different methods have been substituted in the energy to evaluate extra band of ν2 and ν3 transitions62.The values of nephelauxetic ratio β35(the ratio of the observed values of inter-electronic repulsion parameter B in the complex with the value in the free ion) are in the range of 0.60-0.94.This is also in the support of above observations. The values of β35 also indicate the presence of sufficient covalent bonding in the complexes 55-59. An octahedral geometry was suggested (Table 2).

Infrared Spectra Studies

The I.R. spectrum of hydroxamic acids and its mixed ligand metal complexes shows the bands at νOH, νC=O and νN-O due to deportation of νNOH of hydroxyl amine are associated with hydroxamic acids63Hydroxamic acids shows νOH absorption band at 3090-3190cm-1 respectively, which vanishes in case of metal complexes of hydroxamic acids due to

deprotonation of –OH group64-66. A sharp and strong band has been observed at 1650-1680cm-1 in the I.R. spectra of hydroxamic acids, which is due to presence of carbonyl stretching vibration. This band is lowered at about ?50 cm-1 in the case of metal complexes of hydroxamic acids, which clearly indicates that the complexation of hydroxamic acids with Cr (III) is through carbonyl group67-70. This confirms the formation of new coordination bond between carbonyl oxygen atom and Cr(III) metal ion71-73The typical hydroxamic group band νNOH observed at 1180-1150cm-1 for free hydroxyl amine is shifted to lower wave number as appears at 1120-1140 cm-1 in the complexes due to protonation of one hydrogen atom74-75. Except all these bandsνC-N andνN-O are assigned with difficulty due to overlap by several other modes of vibrations, thusνN-O vibration in free ligand is present at about 910-920 cm-176, which is found at higher frequency on complexation about 24˜48 cm-177.This indicates the formation of a νN-O….Cr coordination bond78.The thiocynate has two bonding sites therefore it has been proved as versatile ambidented ligand79.

References:-

- B. Kalyana Ramua, K. Raghubabua , M. Syambabu Indo-Global Journal of Pharmaceutical Sciences, 1., 2, 152-159,2011.
- Y. K. Agarwal , Rev. Anal. Chem., 5, 3, 1980.
- Y. K. Agarwal, R .D. Roshania, Bull .Soc.Chem. Belg., 89, 159, 1980.
- S. S. C. Tam, D. H. S. Lee, E. Y Wang, D. G. Munroe, C. Y. Lace, J. BiolChem, 270, 13948- 13955, 1955.
- M. Arnold, D.A. Brown, O.Degg,, W.Errington,,W.Haase,K.Herling, T.J. Kemp,R.Werner,Inorg.Chem., 37, 2920-2925, 1998.
- Botos, L. Scapozza , D. Zhang,,L. A. Liotta, E.F. Meyer , Proc. Natl. Acad. Sci. U.S.A.,93,2749-2754, 1996.
- R. Zamora, A. Grzesiok, H. H. Weber, M. Feelisch, Biochem. J. 312, 333-339, 1995.
- V. Kahn, J. Food Biochemistry 23, 409. 1999.
- M. J. Miller, Chem. Rev., 89, 1563-1579, 1989.
- C. J. Marimon, D. Griffith, K. B. Nolan, Eur. J. Inorg. Chem., 3003-3016, 2004.
- S. S. C. Tam, D. H. S. Lee, E. Y. Wang, D. G. Munroe, C. Y. Lau, J. Biol. Chem.,270,13948-13955,1995.
- M. Arnold, D. A. Brown, O. Degg, W. Errington, W. Haase, K. Herlihy, T. J. Kemp, H. Nimir, R. Werner, Inorg. Chem., 37, 2920–2925.1998.
- W. Mertz and K. Sehwarz , Arch. Bio. Chem. Biophys., 58, 504,1955; W.Mertz, Physiol. Rev., 49,163, 1969
- 19 C. K. Wada, J. H. Holms, M. L. Curtin, Y. Dai., A. S. Florjancic, R. B. Garland. Y. Guo, H. R. Heyman, J. R. Stacy, D. H. Steinman, D. H. Albert, J. J. Bouska, I. N. Elmore, C. L. Goodfellow, P. A. Marcotte, P. Tapang, D. W. Morgan, M. R. Michaelides, S. K. Davidsen, J. Med. Chem., 45, 219-232, 2002.
- T. Kolasa, A. O. Stewart, C. D. W. Brooks, Asymmetric synthesis of (R)-N-3-Butyn-2-yl-N-Hydroxyurea, Tetrahedron: Asymmetry,7,729-736, 1996.
- C. J. Marmion, T. Murphy, J. R. Docherty,K. B. Nolan, Chem. Commun., , 13, 1153–1154, 2000
- H.A.Mahajan, P.M.Dhadke, Proc.Nat.Acad.Sci., India, 58(A), III, 1998.
- B. Kurzak, H. Kozlowski, E. Farkas, Coord. Chem. Rev., 114, 169– 200. 1992.
- K.Mazumdar"N-Benzoyl Phenyl Hydroxyl Amine and Its Analogues '(Pergamon,Oxford),1972
- E. Farkas, E.A. Enyedy, G. Micera, E. Garribba, Polyhedron ,19,1727, 2000.
- E. Farkas, E. Kozma, M. Petho3, K.M. Herlihy, G. Micera, Polyhedron, 17, 3331, 1998.
- Dessı`, G. Micera, D. Sanna, L. Strinna-Erre, J. Inorg. Biochem. , 48, 27, 1992.
- M. .R. Iskandar, K. J. Ismail, Trans. Met. Chem., 4, 225, 1979.
- H.Khel (Ed.), Chemistry and Biology of Hydroxamic acid, Karger, New York, 1982.
- S.K. Bajpai, G. N. Shukla, J. Ind. Chem. Soc., 59,43,1982.
- J.R.J.Sorenson, U.S.Patent, U.S.4221785 (C.I, 424-230; A61K31/60), 1980.
- United State Food and Drug Administration, Fed.Regist.49, 25845, 1984.
- G.M. Turreva, E.E.Bazunov, V.I.Zapadnyk, T.A.Groshov, Farm.Zn.(Kiev),3,45.1984.
- Tanave -Seiyaku Co. Ltd., Japan, Jpn Kokai Tokkyo, Koho, 23497, 1961.

- Lion Corp, Japan Kokai Tokyo Koho, JP5931706 [8431706](CIA61K7/00),1984.
- T. Pryzbylski,R. M. Syren ,S. W. Fox, Energy Res., 3,367,1983.
- P.R. Mandilik, A.S.Aswar, Polish Journal ofChemistry, 77, 2, 129, 2003.
- S.H.Ali, Nasseri Mohommod, Bull.Chem.Soc. Of Japan, 71, 1, 137, 2003.
- P.Robin ,K. D. Brain, D. Tadiconda, U. Bhaskar, E. Regina Ross, R. Arnaldem, Astash Kin Anderi,V.,42,2,566,2003.
- Wang Juan Ji, Zhen Ping, Xiazo, Wen Jin., 18, 3, 254,2001.
- Celil Cumuli, Tumer Mchmet, Serin Selantti, 32, 10, 1839, 2002.
- D.U.Ward,C.D.Satish,V.H.Kulkarni,S.Chandrasekhan,Ind.Chem.,39A,415,2000.
- Chai Ki Young, Journal of Chem.Crystallgr.,35, 5, 419,2005.
- S.Ma`wcherng,Wang Yuen Hua, Wang Ju Chun ,J.Chin. Chem., Soc., 51, 1, 43, 2004.
- Sakamoto, S. Itose , T. Ishimori, N.Matsumoto, H .Okawa and Kida Sigio, Bull. Chem. Soc., Japan 83, 1830-1831, 1990.
- J.Roesler, Liebigs ann., 141, 185, 1867.
- U.Priyadarshini, S.G Tandon, J.Chem. Engg.Data. 12, 143, 1967.
- L.Doberzanska, C.Wrzeszez, A.Grodzicki, F.Rezpoch,Polish J.Chem., 74,1017,2000
- J.Leong, K.N.Raymond ,J.Am.Chem. Soc., 96, 1757-1762, 1976.
- S.S Sandhu,N.S.Aulak,J.Ind.Chem.Soc.,68,29-33,1991.
- S.J.Park , Y.K.Choi, S.S.Han, K.W.Lee , Bull. Korean.Chem. Soc., 20, 12, 1475, 1999.
- Vaishali V.Dubey,Harjeet D. Juneja,Journal of Applied Polymer Sciences ,99,1,273-278,2006
- S.Isied, G.Kuo, K.N.Raymond, J.Am. Chem.Soc. 98, 1763-1767, 1976.
- J.Leong, K.N.Raymond J.Am.Chem.Soc., 96, 1757-1762, 1976.
- E.Konig,Structure and ZBonding,9,175.1971.
- C.K.Jorgenson,Absorption Spectra and Chemical Bonding in Complexes (Pergamon Press,London),1962.
- A.B.P Lever,Advances in Chemistry Series,62,435,1966.
- B.P.Douglas,D.H.Daniel,Concept and Models of Inorganic Chemistry (Oxford and IBH Publishing Co.Calcutta),233,1970.
- L.E.Orgel, J.Chem.Phys. 23,1004,1955.
- C.L.Sharma, V.P Mishra, J.Indian Chem Soc., LX, 809812, 1983.
- D.W.Burnum, J.Inorg.Nucl. Chem. 21, 221, 1961.
- V.Mishra,Ph.D. Thesis,University of Roorkess,Roorkee(India),1985.
- Gopika D.Mehd.,Y.K.Agarwal,J.Indian Chem. Soc., LX,686-688,1983.
- Y. K. Agrawal, J.Chem. And Engg.Data, 22, 175, 1967.
- E. Farkas, E´ .A. Enyedy, H. Cso´ka, J. Inorg. Biochem. 79 (2000)205.
- H.J. Lindner, S. Goettlicher, Acta Crystallogr., Sect. B 25 (1969)832.
- K.Nakamoto, Infrared and Raman Spectra of inorganic and coordination Compounds, 3rd Ed., New York: Wiley, 1997.
- F. J. Faraha, M.S.Thesis, Wichita, State University, Whichita, Kansa, 1957.
- E. M.Usova, E.M.Voroshib, Dobel Akad, S.S.S.R., 113, 1303, 1957.
- F.Mathis, Bull.Soc.Chem. D-9, 22, 1953.
- D.K.Agarwal, S.G.Tondon, J.Indian Chem. Soc., 48, 572, 1971
- Pathik Chandra Kundu, Sadananda Bhatttacharya, Indian Journal of Chemistry, 21A, 586-589, 1982
- T.K. Banerjee, S.K. Brahma and S.P. Bag, Ind. J. Chem., 31A, 202,1992.
- Y. K.Agarwal, S.G.Tondon, J.Inorg.Nucl. Chem., 36 869, 1974.
- F. W. Fifield and D Kealey Second Edition, 1983, London
- K. Shahid, S. Ali, M. Hussain, M. Mazhar, S. Mahmood, S. Rehman, Turk. J.Chem.,26, 589e,597,2002.
- C.K.Narula, V.D.Gupta, J.Indian Chem.Soc., LVII, 230-232, 1980.
- G. Singh, V.D. Gupta, Nat.Acad.Sci.Letters, 5,12,1982
- J. G. Hasnoot, W. L.Reed, U.K.Drissen, J.Inorg.Chem. 23, 2803, 1984.

ISSN : 2349-2597

Analysis Of Multistage Markov Manufacturing System With Rework And Inspection

Susheel Kumar
Department Of Mathematics, Agra College, Agra

Abstract

In this paper, we studied a Markov chain model of multistage manufacturing system. Markov model is developed by incorporating the concepts of rework , rejection and inspection. After each machining station inspection of all the items, the defected item are sent for rework to the machining concerned. And calculate various performance indices such as percentage of complete parts, cost function, expected total number of inspection and estimate man-hour requirement per entering part for each machine etc. are obtained in explicit form. We have completed various results by taking numerical illustrations.

Keywords: Multistage manufacturing Markov chain, Rejection Inspection, Rework.

1. Introduction:

In real life situation, production of a company is generally affected by failure of "some machines engaged or breakdown in the production processes. After having inspection of the products. The planning of design and operation of manufacturing systems, the inspection of the systems are involved by engineers.

In an industry, several components or raw materials enter in manufacturing system and the final output is one product. Optimal control design for a single product manufacturing system subject to inspection for detecting error has been considered by Hassan and Manaspite (1982). In multistage manufacturing systems producing some non confirming items presents economics operational problems.

Sha et. al. (2006) developed a dispatching rule for photolithography scheduling with an on line rework strategy. Optimal safety stocks and preventive maintenance periods in unreliable manufacturing systems was developed by Gharbi et. al. (2007). Pradhan and Damodaran (2009) proposed performance characterization of complex manufacturing systems with general distributions and job failures. Colledani et al. (2010) solve the analysis of the production Variability in multi-stage manufacturing systems. Simultaneous control of production, repair/ replacement and preventive maintenance of deteriorating manufacturing system was developed by Nodem et al. (2011). Chiu et al. (2011) developed the mathematical modeling for solving manufacturing run time problem with defective rate and random machine break down. The robustness of scheduling policies in multi-product manufacturing systems with sequence-dependent set up times and finite buffers was provided by Feng et al. (2012). Cao et al. (2012) find the performance evaluation and enhancement of multistage manufacturing system with rework loops. Modeling and analysis of a product substation strategy for a stochastic manufacturing/ remanufacturing system was done by Ahiska and Kurtul (2014). Jovanovic et al. (2014) worked on the energy efficiency optimization of air supply system in a water bottle manufacturing system. Towards a cloud-based manufacturing execution system for distributed manufacturing was solved by Helo et al. (2014). Lei et al. (2014) developed the deadlock-free scheduling for flexible manufacturing systems using Petri nets and heuristic search. Sun and Li (2014) considered the potential capability estimation for real time electricity demand response of sustainable manufacturing systems using Markov decision process. Mohammadi et al. (2015) developed the optimizing integrated manufacturing and products inspection policy for deteriorating manufacturing system with imperfect inspection. Zhang et al. (2015) solve the additive

manufacturing of Ti-Si-N ceramic coatings on titanium. Markov modeling and analysis of multi-stage manufacturing systems with remote quality information feedback was developed by Du et al. (2015).

2. Model Description

Suppose in the manufacturing process, the raw parts are machined on a machines and inspected the parts after machining operation. Manufacturing steps of the sequence are given in the following figure 1.

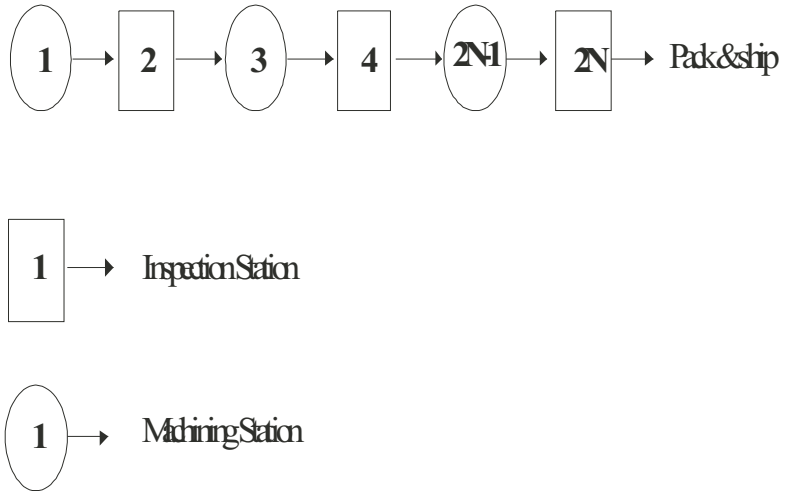

Figure 1

At the time of manufacturing process, some parts may be rejected from machines and extra parts go to inspection station where the inspector checks these parts. There may be possibilities,

1. The parts may be defective,
2. The parts may be for rejection,
3. The parts may be clear,

Defective parts are send to reworking, rejected parts are sent to scrap and the clear parts are sent to next machining station. This process continue till $(2n-1)^{th}$machining station and $(2n)^{th}$ inspection station. The schematic diagram for manufacturing process is given in figure 2.

1,3,5…….. (2n-1) nodes represent the machining station,

2,4,6,…….(2n) nodes represent the inspection station and $(2n+1)^{th}$node is for pack & ship ,

$(2n+2)^{th}$ node is for scraps bin, respectively,

We have used some other notations to formulate our model are as follows,

R_1 : Probability that reject part has send to scrape, i=1,2,…….2n

$\alpha_{i,j}$: Probability that defective part has sent for rework to i^{th} state to j^{th} state,

λ_1 : Probability that clear parts have been sent to i^{th} state to $(i+1)^{th}$ state,

$P_i(t)$: Probability that at time t, the system being at state i (i=1,2,…2n)

P_i : Steady state probability of system being at state i (i=1,2….2n)

N : Number of new parts entered at node 1

The characteristics of Markov manufacturing process are given in table 1.

TABLE 1: Characteristics of the manufacturing process

S.No.	Operation	Time-Rqmt. T_j (man-hour)	Operating Cost C_j (Rs.)	Scrap Rate S_j	Rework
1	Machine 1	T_1	C_1	S_1	—
2	Inspection 1	T_2	C_2	S_2	N_2
3	Machine 2	T_3	C_3	S_3	—
4	Inspection 2	T_4	C_4	S_4	N_4
….	….	….	….	….	….
….	….	….	….	….	….
2n-l	Machine n	T_{2n-i}	C_{2n-1}	S_{2n-l}	
2n	Inspection n	T_{2n}	C_{2n}	S_{2n}	N_{2n}
2n+l	Pack and ship	T_{2n+1}	C_{2n+1}	S_{2n+l}	...

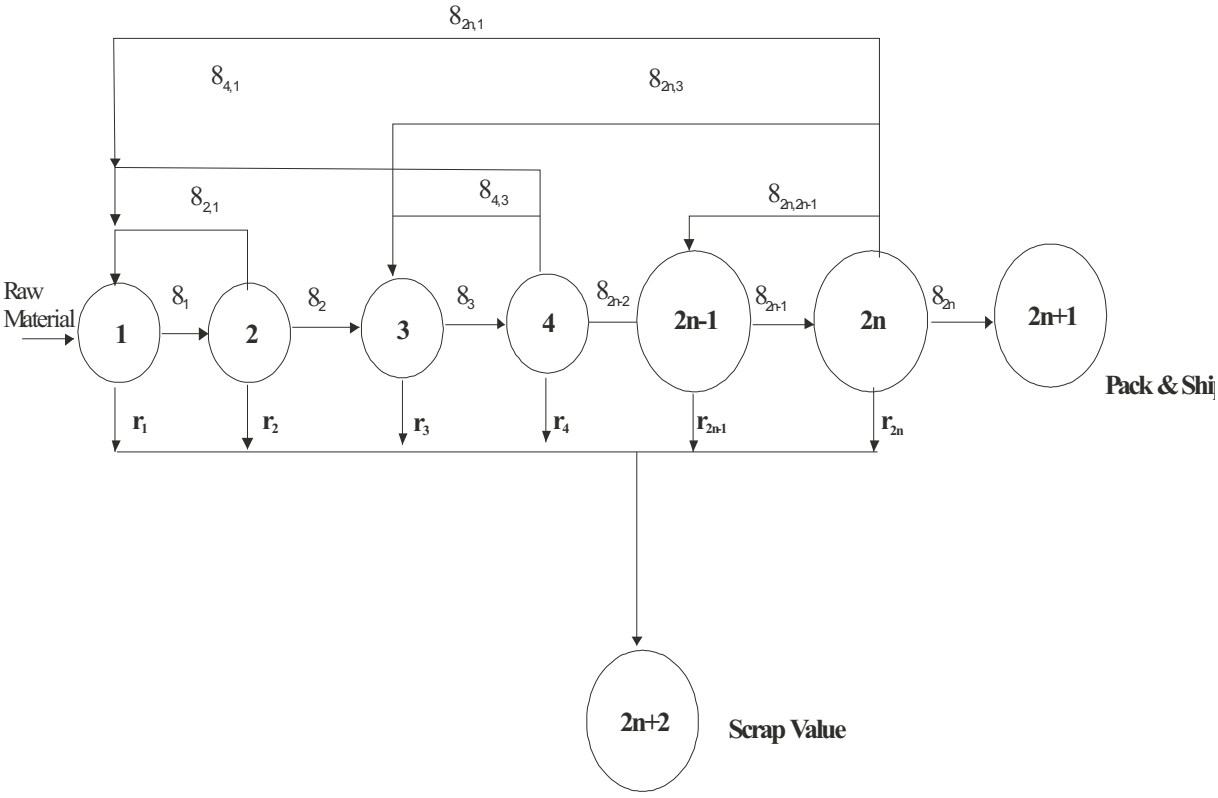

Fig.-4.2: Schematic diagram of a manufacturing system

Figure 1

3. The Analysis

The manufacturing model can be formulated by constructing the transient equations. By using appropriate transition rates, as shown in figure 2, the governing transient equations are as given below:

$$\frac{dP_1(t)}{dt} = -(\lambda_1 + r_1)P_1(t) + \sum_{i=1}^{n} \alpha_{2i,1}P_{2i,1}(t), \qquad .....(1.1)$$
$$i = 1, 2, ..., n.$$

$$\frac{dP_i(t)}{dt} = -\left(r_1 + \lambda_1 + \sum_{j=1}^{i/2} \alpha_{2i,2j-1}\right)P_i(t) + \lambda_{i-1}P_{i-1}(t), \qquad ....(1.2)$$
$$i = 1, 3, 5, ..., (2n-1).$$

$$\frac{dP_1(t)}{dt} = -(r_1 + \lambda_1)P_i(t) - \sum_{j=i+1/2}^{n} \alpha_{2j,i}P_{2j}(t) + \lambda_{i-1}P_{i-1}(t), \qquad ....(1.3)$$
$$i = 2, 4, 6, ..., (2n-2).$$

$$\frac{dP_{2n}(t)}{dt} = -\sum_{j=1}^{n} \left[\alpha_{2n,2j-1} + r_{2n}\right]P_{2n}(t) + \lambda_{2n-1}P_{2n-1}(t) \qquad ....(1.4)$$

In limiting case, when $Lim_{t\to\infty} \frac{dP_i(t)}{dt} = P_{i,}$ we get steady state equations as

$$(\lambda_1 + r_1)P_1 = \sum_{i=0}^{n} \alpha_{2i,1}P_{2i} \qquad ....(1.5)$$
$$i = 1, 2, ..., n$$

$$\left[(r_1 + \lambda_1) + \sum_{j=1}^{i/2} \alpha_{2i,2j-1}\right]P_i = \lambda_{i-1}P_{i-1}, \qquad ....(1.6)$$
$$i = 3, 5, ..., (2n-1).$$

$$(r_i + \lambda_i)P_i = \sum_{j=i+1}^{n} \alpha_{2j,i}P_{2j} + \lambda_{i-1}P_{i-1}, \qquad ....(1.7)$$
$$i = 2, 4, ..., (2n-2).$$

$$\left[\sum_{j=1}^{n} \alpha_{2n,2j-1} + r_{2n}\right]P_{2n} = \lambda_{2n-1}P_{2n} \qquad ....(1.8)$$

Now the transition probability matrix is given by

$$P=\begin{bmatrix} 0 & \lambda_1 & 0 & 0 & .... & 0 & 0 & r_1 \\ \alpha_{2,1} & 0 & \lambda_2 & 0 & .... & 0 & 0 & r_2 \\ 0 & 0 & 0 & \lambda_3 & .... & 0 & 0 & r_3 \\ \alpha_{4,1} & 0 & \alpha_{4,3} & 0 & .... & 0 & 0 & r_4 \\ .... & .... & .... & .... & .... & .... & .... & .... \\ .... & .... & .... & .... & .... & .... & .... & .... \\ \alpha_{2n(1)} & 0 & \alpha_{2n(3)} & 0 & .... & 0 & 0 & r_{2n} \\ 0 & 0 & 0 & 0 & 0 & 0 & 1 & 0 \\ 0 & 0 & 0 & 0 & 0 & 0 & 0 & 1 \end{bmatrix}$$

Partitioning the matrix, we get

$$P=\begin{bmatrix} Q & R \\ 0 & I \end{bmatrix},$$

where

Q= $2n \times 2n$ matrices containing the transition probabilities between transient states

R =$2n\times 2$ matrix containing transient probabilities from transient states to absorbing states

0 = Zero matrix of order $2 \times 2n$
I = Identity matrix of order 2×2
Then the matrix

$$E=(I-Q)^{-1}$$

$$E=\begin{bmatrix} e_{11} & e_{12} & e_{13} & e_{14} & e_{15} & e_{16} & .... & e_{1(2n)} \\ e_{21} & e_{22} & e_{23} & e_{24} & e_{25} & e_{26} & .... & e_{2(2n)} \\ e_{31} & e_{32} & e_{33} & e_{34} & e_{35} & e_{36} & .... & e_{3(3n)} \\ e_{41} & e_{42} & e_{43} & e_{44} & e_{45} & e_{46} & .... & e_{4(4n)} \\ .... & .... & .... & .... & .... & .... & .... & .... \\ .... & .... & .... & .... & .... & .... & .... & .... \\ e_{2n(1)} & e_{2n(2)} & e_{2n(3)} & e_{2n(4)} & e_{2n(5)} & e_{2n(6)} & .... & e_{2n.(2n)} \end{bmatrix}$$

and

$$A = E \times R \begin{bmatrix} a_{11} & a_{12} \\ a_{21} & a_{22} \\ a_{31} & a_{32} \\ \dots & \dots \\ a_{n1} & a_{n2} \end{bmatrix}$$

4. Performance Indices

In this section, we establish some performance indices as follows:

- The percentage of the parts which are successfully completed, is given as, Percentage of complete parts $=a_{11}\times 100$.
- The expected number of raw parts which will be required to fill an order for 100 completed parts, i.e., the expected number of raw parts required $E[X] = 100/a_{11}$
- The expected total number of inspections for entering part
$$E[Y] = \sum_{i=1}^{2n} e_{1(2i)} = e_{1,2} + e_{1,4} + e_{1,6} +, \dots, + e_{1,2n}$$
- For machine, the estimate man-hour requirements per entering parts
$$M_P = t_{2i-1}\left(e_{1,2i-1}\right) \qquad i = 1, 2, \dots\dots\dots, n$$
- For inspection station, the estimated man-hour requirements per entering part is
$$I_P = t_{2i}.e_{1,2i} \qquad i = 1, 2, \dots\dots\dots, n$$
- For pack and ship, the estimated man-hour per entering part is
$$S_P = \sum_{j=1}^{2n} t_j\left(e_{1,j}\right) + t_{2n+1}\left(a_{11}\right)$$
- For machine, the estimated man-hour requirements per completed part is
$$M_c = t_{2i-1.}e_{1,2i-2} / a_{11} \qquad i = 1, 2, \dots\dots\dots, n$$
- For inspection station, the estimate man-hour requirements per completed part is
$$I_c = t_{2i} \times e_{1,2i} / a_{11} \qquad i = 1, 2, 3, 4, \dots\dots\dots, n$$
- For pack and ship, the expected total man-hour requirements per completed part is
$$S_c = \sum_{j=1}^{2n} t_j\left(e_{1,j}\right) / a_{11}$$

Operating Cost = $\sum_{j=1}^{2n} c_j t_j e_{i,j} / a_{11} + t_{2n+1} e_{2n+1}$

Scrap value = Pa_{12} / a_{11}

The expected total direct costs is obtained as

$$T.C = P \times \frac{1}{a_{1,1}} + \sum_{j=1}^{2n} c_j t_j \left(e_{1,j}\right) / a_{11} c_{2n+1} \left(t_{2n+1}\right)$$

where

cost of raw material $= P/a_{11}$

Operating Cost = $\sum_{j=1}^{2n} c_j t_j e_{i,j} / a_{11} + t_{2n+1} e_{2n+1}$

Scrap Value $= Pa_{12} / a_{11}$

5. Special Cases

It is worth while to deduce our model to some special cases by setting appropriate parameter values as follows:

Case I:

If we substitute rework probability $\alpha_{i,i-1} = \alpha$.where i = 2,4,6,....,2n, then our model provides results for homogenous Markov-multistage manufacturing model with inspection, rejection and rework.

Case II:

Model with rework for just preceding state. By setting $\alpha_{i(i-1)} \neq 0$ and $\alpha_{i(i-1)} = \alpha_{i(i-3)} = \alpha_{i(i-5)}, \ldots\ldots\ldots, = 0$ our model coincides with the model for multistage manufacturing system with inspection, rejection and work.

Case III:

When $\alpha_{i(i-1)} = 0$, we come across a model with inspection and rejection.

6. Numerical Illustration

For the validity of analytical results, we have performed extensive numerical experiments. We give detail computational steps by taking an example as stated below.

Consider a manufacturing system having 4 machines and 4 inspection stations. The state transition diagram for the same is shown in fig 1.3 by indicating the requisite routing probabilities.

Suppose that an order has been received for 100 machined parts. The sequence of manufacturing step for each part is Raw parts→machine 1→inspection 1→machine 2→inspection 2→machine 3→inspection 3→machine 4→inspection 4→pack and ship.

Assume that the manufacturing process has characteristic shown in Table 2. The cost of raw material (blanks) is Rs. 50.00 per part and the scrap value is Rs. 12.00 per part.

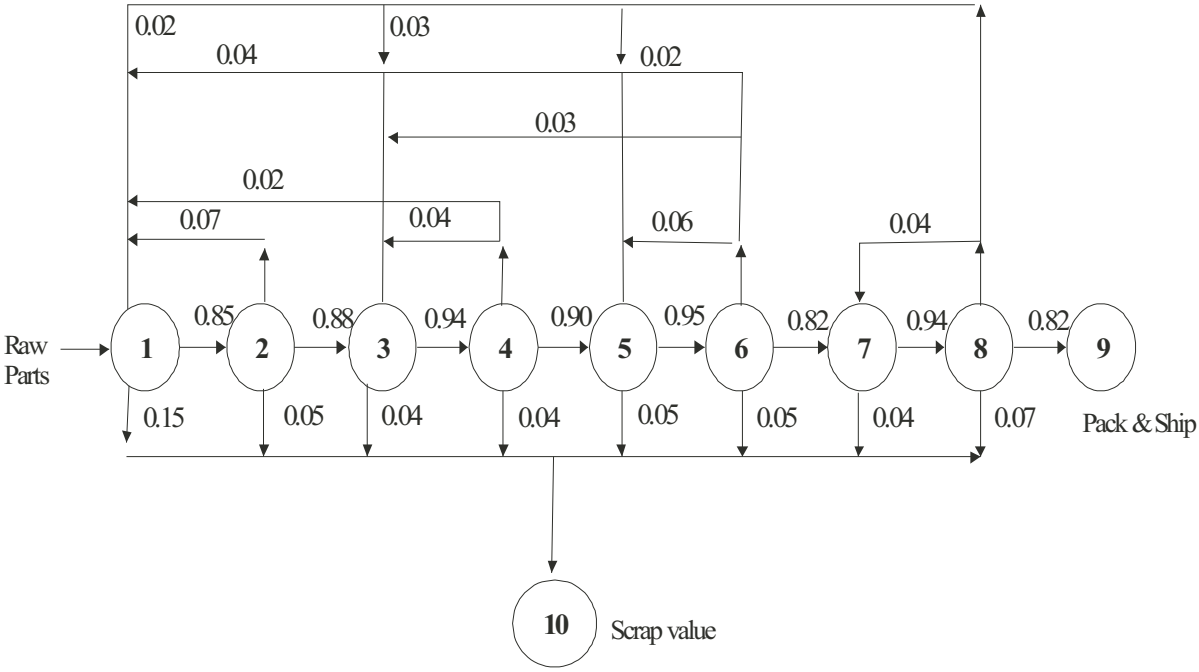

Fig.-4.3: Transition Probability diagram

Table 2: Characteristics of the Example Process

Operation J	Time-Rq mt T_j Man-hour	Operating cost (Rupees)	Scrap Rate%	Rework Rate
1. Machine 1	5.0	12.00	15	-
2. Inspection 1	1.6	10.00	5	7
3. Machine 2	3.0	12.00	4	-
4. Inspection 2	1.6	10.00	4	6
5. Machine 3	2.7	15.00	5	-
6. Inspection 3	1.6	10.00	5	13
7. Machine 4	2.5	15.00	4	-
8. Inspection 4	1.6	10.00	7	11
9.Pack &Ship	0.7	05.00	—	—

Transition probability matrix is obtained as

$$P=\begin{bmatrix} 0 & 0.85 & 0 & 0 & 0 & 0 & 0 & 0 & 0 & 0.15 \\ 0.07 & 0 & 0.88 & 0 & 0 & 0 & 0 & 0 & 0 & 0.05 \\ 0 & 0 & 0 & 0.94 & 0 & 0 & 0 & 0 & 0 & 0.04 \\ 0.02 & 0 & 0.04 & 0 & 0.90 & 0 & 0 & 0 & 0 & 0.04 \\ 0 & 0 & 0 & 0 & 0 & 0.95 & 0 & 0 & 0 & 0.05 \\ 0.04 & 0 & 0.03 & 0 & 0.06 & 0 & 0.82 & 0 & 0 & 0.05 \\ 0 & 0 & 0 & 0 & 0 & 0 & 0 & 0.94 & 0 & 0.04 \\ 0.02 & 0 & 0.03 & 0 & 0.02 & 0 & 0.04 & 0 & 0.82 & 0.07 \\ 0 & 0 & 0 & 0 & 0 & 0 & 0 & 0 & 1 & 0 \\ 0 & 0 & 0 & 0 & 0 & 0 & 0 & 0 & 0 & 1 \end{bmatrix}$$

Partioning the matrix, we get

$$P=\begin{bmatrix} Q & R \\ 0 & I \end{bmatrix},$$

$$Q=\begin{bmatrix} 0 & 0.85 & 0 & 0 & 0 & 0 & 0 & 0 \\ 0.7 & 0 & 0.88 & 0 & 0 & 0 & 0 & 0 \\ 0 & 0 & 0 & 0.94 & 0 & 0 & 0 & 0 \\ 0.02 & 0 & 0.04 & 0 & 0.90 & 0 & 0 & 0 \\ 0 & 0 & 0 & 0 & 0 & 0.95 & 0 & 0 \\ 0.04 & 0 & 0.03 & 0 & 0.06 & 0 & 0.82 & 0 \\ 0 & 0 & 0 & 0 & 0 & 0 & 0 & 0.94 \\ 0.02 & 0 & 0.03 & 0 & 0.02 & 0 & 0.04 & 0 \end{bmatrix}$$

$$0=\begin{bmatrix} 0 & 0 & 0 & 0 & 0 & 0 & 0 & 0 \\ 0 & 0 & 0 & 0 & 0 & 0 & 0 & 0 \end{bmatrix}$$

$$R = \begin{bmatrix} 0 & 0.15 \\ 0 & 0.05 \\ 0 & 0.04 \\ 0 & 0.04 \\ 0 & 0.05 \\ 0 & 0.05 \\ 0 & 0.04 \\ 0.82 & 0.07 \end{bmatrix}$$

$$|I - Q| = .72393,$$

$$E = |I - Q|^{-1}$$

$$= \begin{bmatrix} 1.12931 & 0.95991 & 0.92259 & 0.86724 & 0.84127 & 0.07992 & 0.68095 & 0.64009 \\ 0.15213 & 1.12931 & 1.0854 & 1.02028 & 0.98972 & 0.94024 & 0.80112 & 0.75305 \\ 0.08304 & 0.07058 & 0.16002 & 1.09040 & 1.05777 & 1.00488 & 0.85619 & 0.80482 \\ 0.08834 & 0.07509 & 0.17024 & 1.16002 & 1.12529 & 1.06902 & 0.91085 & 0.85619 \\ 0.06937 & 0.05897 & 0.11709 & 0.01107 & 1.18461 & 1.12538 & 0.95886 & 0.90133 \\ 0.07302 & 0.06207 & 0.12326 & 0.11586 & 0.19433 & 1.18461 & 1.00933 & 0.94877 \\ 0.02585 & 0.02197 & 0.05430 & 0.05104 & 0.07057 & 0.06704 & 1.09619 & 1.03042 \\ 0.02750 & 0.02337 & 0.05771 & 0.05430 & 0.07507 & 0.07132 & 0.10233 & 1.09619 \end{bmatrix}$$

$$A = E \times R = \begin{bmatrix} .52487 & .40708 \\ .61753 & .34642 \\ .65995 & .17106 \\ .70207 & .27629 \\ .73909 & .23542 \\ .77799 & .19935 \\ .84494 & .13204 \\ .89887 & .13475 \end{bmatrix}$$

(I) Percentage of the parts which are started as successfully completed,
$= a_{11} \times 100 = 52.48738,$

(II) The expected number of blanks which will be required to fill an order for 100 complete parts $=100/a_{11}=1007.5248738 =190.52$

(III) The expected total number of inspection which entering parts will undergo,
$= \sum_{i=1}^{4} e_{1,2i} = .95991 + .8672 + .0799 + .6400 = 1.971079,$

(IV) The estimated man-hour requirements per entering parts for each machine, for each inspection station, for pack and ship are as follows:

- For machine, the estimate man-hour requirements per entering part

$$= \sum_{i=1}^{4} t_{2i-1} \times e_{1,2i-1} = 12.38,$$

- For inspection station, the estimate man-hour requirements per entering part,

$$= \sum_{i=1}^{4} t_{2i} \times e_{1,2i}, = 4.44,$$

- The expected total man-hour requirements per entering part

$$= \sum_{i=1}^{8} t_j \times e_{1,j} + t_{j+1} \times a_{11},$$

Operation	Man-hours/Entering part
1. Machine 1	5.0×1.12931=5.64655
2. Inspection 1	1.6×.95991 =1.53586
3. Machine 2	3.0×.92259=2.76777
4. Inspection 2	1.6×.86724=1.387584
5. Machine 3	2.7×.84127=2.271429
6. Inspection 3	1.6×.079920=0. 127872
7. Machine 4	2.5×.68095=1.702375
8. Inspection 4	1.6×.64009=l.024144
9. Pack &Ship	0.7×0.5247 = 0.3674117
	Total =Rs. 16.8313

(V) The estimate man-hour requirement per completed parts for each machine, for each inspection station, for pack and ship are obtained as follows

- For machine, the estimate man hour requirements per completed part

$$= \sum_{i=1}^{5} t_{2i-1} \times e_{2i-1} / a_{11} = 23.06021,$$

- For inspection, the estimated man-hour requirements per

Completed part = $= \sum_{i=1}^{4} t_{2i} \times e_{2i} / a_{11} = 9.9572,$

- For pack and ship, the estimated man-hour requirements per competed part is

The expected total man-hour requirements per completed part is

$$= \sum_{i=1}^{8} t_j \times e_{1,j} / a_{11} + t_{j+1}$$

Operation	Man-Hrs./Completed parts
1.Machine	5.0×l.l2931/.5248=10.7579
2. Inspection 1	1.6×.95991/.5248 =2.92614
3.Machine 2	3.0×.92259/.5248 =5.27321
4. Inspection2	1.6×.86724/.5248=2.64365

5.Machine 3	2.7×.841277.5248=4.32757
6. Inspection 3	1.6×.79920/.5248=2.43634
7. Machine 4	2.5×.68095/.5248=3.24339
8. Inspection 4	1.6×.64009/.5248=l.95121
9.Pack & Ship	0.7×.5248/.5248=0.700000
	Total = Rs. 34.25935

(VI) The expected total direct costs (raw material), operating costs, scrap value of reject parts per completed parts.
Cost of raw material=50×1.905219=95.26099

Operating costs,

Operation	Hourly Rate x Man-Hrs
1. Machine 1	12×10.7579=129.095032
2. Inspection 1	10×2.9261=29.26143389
3. Machine 2	12×5.2732=63.27852523
4. Inspection 2	10×2.6436=26.43652627
5. Machine 3	15×.3275=64.91357541
6. Inspection 3	10×2.4362=24.36242765
7.Machine 4	15×.2433=48,650980
8. Inspection 4	10×.95121=19.512195
9.Pack and ship	5×.70000=3.5000
	Total= Rs. 409.010696

Scrap value recovered =12xl.90521x.407069
=9.30712

Therefore the expected total direct cost is obtained,
=95.80+409.01-9.30
=494.96 Rupees,

7. Conclusion And Discussion

We have analyzed the Markov chain of a multistage manufacturing system with inspection, rejection and rework. The raw parts are introduced and route through n machines and consequently checked through n inspection stations. Thus incorporation of inspection after processing on each machine makes the chance of being defective of the final product, very less. The various performances measures and cost function evaluated in our model may be helpful to facilitate an optimal solution which may be more feasible in depicting real time manufacturing system.

References:

- **Hassan, M. and Manaspite (1982):** Quality control design for a single product manufacturing system subject to inspection error, Engg. Costs and Production Economics, Vol. 6, pp. 99-117.
- **Sha, D. Y., Hsu, S. Y., Che, Z. H. and Chen, C. H. (2006):** A dispatching rule for photolithography scheduling with an on line rework strategy, Comput. Industrial, Engg. Vol. 50. No. 3 pp. 2233-247.

- **Gharbi, A., Kenne, J-P. and Beit, M. (2007):** Optimal safety stocks and preventive maintenance periods in unreliable manufacturing systems, Inte. J. Perid. Eco. Vol. 107, No..2, pp. 422-434.
- **Pradhan, S. and Damodaran, P. (2009):** Performance characterization of complex manufacturing systems with general distributions and job failures, Eur. J. Oper. Res. Vol. 197, pp. 588-598.
- **Colledani, M. Matta, A. and Tallio, T. (2010):** Analysis of the production Variability in multi-stage manufacturing systems, CIRP Annals Manuf. Tech. Vol. 52, No. 1, pp. 449-452.
- **Chiu, P. Y., Lin, D. H. and Chang, H. H. (2011):** Mathematical modeling for solving manufacturing run time problem with defective rate and random machine break down, Comput. Indust. Eng. Vol. 60, No. 4, pp. 576-584.
- **Nodem, D. F. I., Kanne, J. P. and Gharbi, A. (2011):** Simultaneous control of production, repair/ replacement and preventive maintenance of deteriorating manufacturing system, Int. J. Prod. Eco. Vol. 134, pp. 271-282.
- **Feng, W. Zheng, L. and Li, J. (2012):** The robustness of scheduling policies in multi-product manufacturing systems with sequence-dependent setup times and finite buffers, Comput. Indust. Engg. Vol. 63, pp. 1145-1153.
- **Cao, Y., Subramaniam and Chen, R. (2012):** Performance evaluation and enhancement of multistage manufacturing system with rework loops, Comput. Indust. Engg., Vol. 62, pp. 161-176.
- **Ahiska, S. S. and Kurtul, E. (2014):** modeling and analysis of a product substation strategy for a stochastic manufacturing/ remanufacturing system, Comput. Indust. Engg., Vol. 72, pp. 1-11.
- **Jovanovic, V., Stevanov, B., Seslija, D., Dudic, S. and Tesic, Z. (2014):** Energy efficiency optimization of air supply system in a water bottle manufacturing system, J., Clean., Prod., Vol. 85, pp. 306-317.
- **Helo, P. suorsa, M. Hai, Y. and Anussornnitisarn, P. (2014):** Towards a cloud-based manufacturing execution system for distributed manufacturing, Comput. Indust. Vol. 65, No. 4, pp. 646-656.
- **Lei, H. Xing, K., Han, L., Xiong, F. and Ge, Z. (2014):** Deadlock-free scheduling for flexible manufacturing systems using Petri nets and heuristic search, Comput. Indust. Engg. Vol. 72, pp. 297-305.
- **Sun Z. and Li, L. (2014):** Potential capability estimation for real time electricity demand response of sustainable manufacturing systems using Markov decision process, J. Clean. Prod. Vol. 65, pp. 184-193.
- **Mohammadi B., Teleizadeh, A. A., Noorosana, R. and Samimi, H. (2015):** Optimizing integrated manufacturing and products inspection policy for deteriorating manufacturing system with imperfect inspection, J. Manuf. System. Vol. 37 No. 1, pp. 299-315.
- **Zhang, Y., Sahasrabudhe, H. and Bandyopa, A. (2015):** Additive manufacturing of Ti-Si-N ceramic coatings on titanium, App. Surf. Sci. Vol. 346, pp. 428-437.
- **Du, S., Xu, R. Haung, D. and Yao, X. (2015):** Markov modeling and analysis of multi-stage manufacturing systems with remote quality information feedback, Comput. Indust. Engg. Vol. 88, pp. 13-25.

ISSN : 2349-2597

Hydrolysis Of 2-Chloro-6-Methyl Aniline Phosphate Triester Undergoes S_N^2 Mechanism With P-N Bond Fission

Dr. Amit Chaudhary,
Chemistry Department, D.S. College, Aligarh.
Email : amitchaudhary111114@gmail.com

Kinetic study of the hydrolysis of 2-chloro, 6-methyl aniline phosphate triester has been carried out in 0.1 to 6.0 mol. dm^{-3} HCL and pH 1.24 to 7.46 at a temperature 97± 0.5°C in 30% dioxan mixture. Kinetic runs were determined by Allen's method. Kinetic study of the phosphate triester has been made at constant ionic strength to estimate theoretical rates. Conjugate acid and neutral species of phosphate triester have been found to be reactive, but for the sake of convinence only neutral species have been described and discussed in this section.

The effect of factor such as temperature, solvent, ionic strength etc on the rate of hydrolysis have also been studied to determine molecularity, bond fission etc. The probable reaction mechanism of the hydrolysis have been determined by comparative kinetic rate data and isokinetic relationsihip plot.

Aim of current study :

Phosphorus, a universal constitutent of protoplasm is essential for growth, health and reproduction in plants and animals. Phosphate esters play a very important role in metabolism of carbohydrates in vital synethesis of nucleotides[1] Thus organic phosphate esters are important both industrially as well as academically. In industries they are used as insecticidedal[2-3], antiviral[4], plasticisers,[5-6] lubricants[7-8], plant harmones[9] etc.

Academically, keeping in mind the importance of organophophates for living organism, systematic kinetic study of the different factors affecting hydrolysis of phosphate esters[10] have been done time to time. This kinetic study provide substantial basis for understanding the reaciton and utility of complicated phosphate esters having C—O—P[11-13], C—S—P[14-15] and C—N—P[16-27] linkages. Thus, on the basis of the kinetic study of phosphate esters quantitatively effective and economically suitable specific measures will be suggested for their applications in various fields.

Chemical kinetics of the hydrolysis via neutral species :

The kinetic study of hydrolysis of triester has been made in the pH region 1.0 to 7.46 in 30% aqueous dioxan mixture at a temperature 97°C. It is clear from the Table 1 that the reaction has the lowest rate in the region 1.24 to 7.46 and after pH 1.24 rate becomes almost constant. Thus contribution of the neutral species is maximum after pH 1.24. This indicates that the rates are independent of the composition of buffer and the reaction is exclusively due to bulk neutral species.

TABLE 1

Ph-Iog Rate Profile Of Tri-2-Chloro, 6-Methyl Aniline Phosphate At 97±0.5°C

pH	10^5 K_e (mol. dm.$^{-3}$min.$^{-1}$) (Obsd.)	5+log K_e
1.24	25.59	1.40
2.20	17.06	1.23
3.30	12.22	1.08
4.17	9.79	0.98
5.60	7.30	0.86
6.43	6.37	0.80
7.46	5.10	0.70

Effect of temperature :

To study the effect of temperature on the rate of hydrolysis, kinetic runs have been performed at 97°, 90°, 85º and 80ºC at pH. 1.24. The rate coefficients have been summarised in Table 2

TABLE 2

Arrhenius Plot For The Hydrolysis Of Tri-2 Chloro, 6-Methylaniline Phosphate At Different Temperature Via Neutral Species

pH	t°C	T.K. (abs.)	$10^5 \cdot \frac{1}{T}$	$10^5.K_e$ (mol.dm.$^{-3}$ min^{-1}) (Obsd.)	5 + log K_e
1.24	97	370	270.2	25.59	1.40
1.24	90	363	275.5	9.55	0.99
1.24	85	358	279.3	5.26	0.72
1.24	80	353	283.2	2.53	0.40

A plot between log rate coefficients and reciprocal of absolute temperature is drawn (Fig.I) to illustrate Arrhenius parameters which give an evidence about the molecularity of the reaciton. Linearity of curve shows the validity of Arrhenius equation.

FIG-1

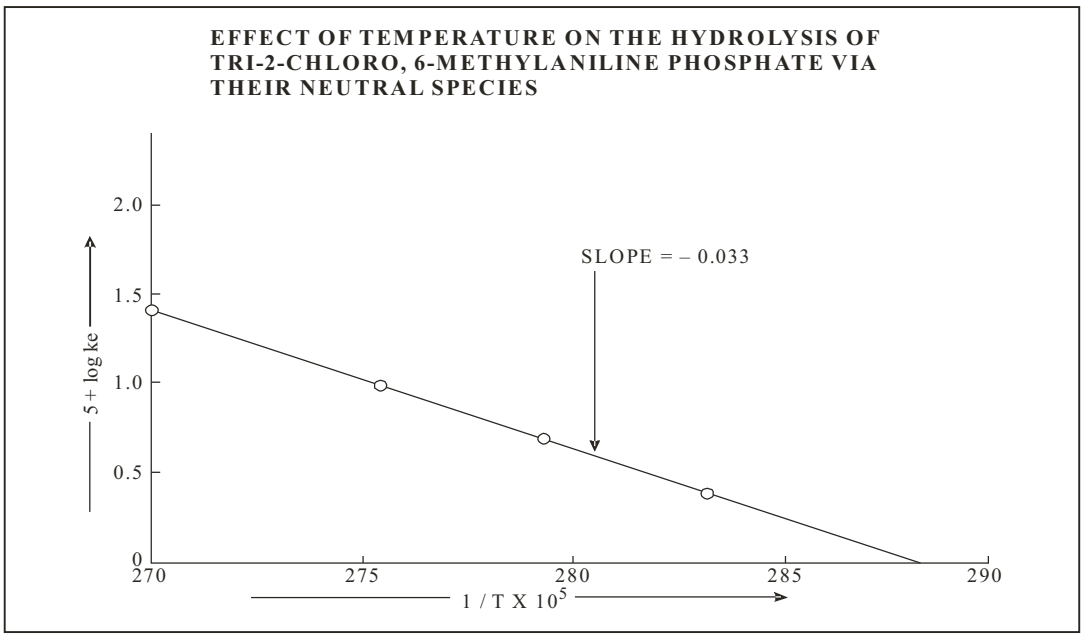

The magnitude of Arrhenius parameters calculated from the above plot have been summarised in Table 3.

TABLE—3

Arrhenius Parameters For The Hydrolysis Of Tri–2–Chloro, 6-Methyl Aniline Phosphate Via Neutral Species

pH	PARAMETER		Entropy ($-\Delta S^{\neq}$) (e.u.)
	Energy of activation (E) (K.Cal mol^{-1})	Frequency factor (A) (Sec^{-1})	
1.24	15.10	3.54×10^{3}	44.712

It is clear from the Arrhenius parameters that the magnitude of energy of activation is very small (E=15.10 K.Cal. mol^{-1}), the value of entropy of activation is negative value ($-\Delta s^{\neq}$ = 44.712 e.u.) and the value of frequency factor is power less than 10^{12} ($A=3.54\times10^{3}$ sec^{-1}). This clearly indicates that the hydrolysis of trimester proceeds bimolecularly via neutral species.

Effect Of Solvent : To study the effect of solvent on rate of hydrolysis kinetic runs were preformed by using different aqueous dioxan mixtures as a reaction medium at 97°C in buffer media at pH 1.24 Table 4 demonstrate the rate constants.

TABLE-4

Effect Of Solvent On The Hydrolysis Of Tri-2 Chloro, 6-Methyl Aniline Phosphate Via Neutral Species

pH	Water Percentage (v/v)	Dioxan Percentage (v/v)	10^{5}.Ke ($mol.dm.^{-3}$ $min.^{-1}$)
1.24	100.0	0.0	25.59
1.24	60.0	40.0	27.20
1.24	50.0	50.0	33.84

Results show that the rate of hydrolysis at pH 1.24 increases with the increase in dioxan constant. These results are fairly in good agreement with the qualitative solvent theory of huges and Ingold[28] and favours the dispersion of charge in the transition state. This gives another evidence in favour of bimolecular nature of hydrolysis.

Bond Fission : From the above results and discussion it is clear that the nature of hydrolysis of the triester via neutral species is bimolecular, now to decide exact path of mechanism of the hydrolysis of the triester it is necessary to know about the cleavage of the bond i.e. hydrolysis via neutral species may involved either, P-N or C-N bond fission The P-N bond fission is more probable because the intermediate formed during the hydrolysis is stablized by resonance. Comparative kinetic parameters also confirmed the P-N bond fission. This can be done by comparing kinetic rate data of the present triester with the other triesters, which have been summarised in the Table 5.

TABLE-5

Isokinetic Relationship Plot Data For The Hydrolysis Of Some Phosphate Tri-Esters Via Their Neutral Species

S.No.	Phosphate triesters	Temp. °C	Medium	E.(K.Cal/ mol^{-1})	$-\Delta S^{\#}$ (e.u.)	Bond fission	Reference
1.	o-Toluidine	80	1.22	26.91	11.91	P–N	29
2.	5-Chioro-2-methylaniline	80	1.24	19.67	29.45	P–N	30
3.	o-CH_3 aniline^{-3}	98	1.24	15.08	41.77	P–N	31
4.	m-Nitroaniline	98	4.17	17.11	42.42	P–N	32
5.	o-Ethoxy aniline	98	4.17	10.06	52.13	P–N	31
6.	p-Nitroaniline	98	4.17	10.07	62.37	P–N	33
7.	α-Napthyl amine	98	1.24	3.66	75.34	P–N	34
8.	p-Toluidne	50	4.11	5.02	76.40	P–N	35
9.	Phenylhydrazophosphate	98	1.24	1.92	89.47		36
10.	2-chloro, 6-methyl aniline	97	1.24	15.10	44.71	P–N*	This work

Results of Table 5 shows that the hydrolysis of the triester proceeds with P–N bond fission. This is further supported by isokinetic relationship plot (fig. II) drawn between eneryg of activation (E) and entropy of activation (-ΔS#). On comparing, it is clear that the point of tri-2 chloro, 6-methyl aniline phosphate lie on the same linear line as of the other phosphate estes having P-N bond fission with S_N^2 mechanism.

FIG-1

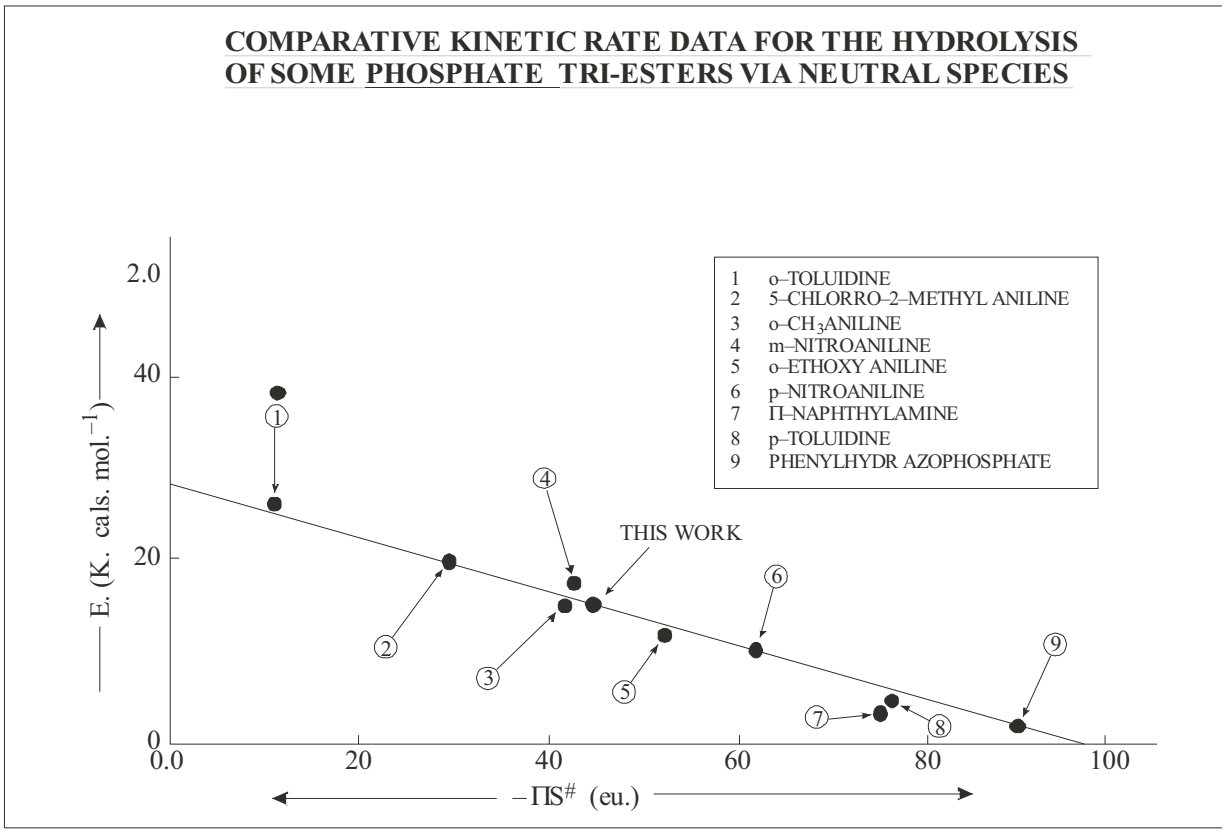

Mechanism : On the basis of all the results and evidenceS, it is clear that hydrolysis of 2-chloro, 6-methyl aniline phosphate triester undergoes S_N^2 mechanism with P-N bond fission.

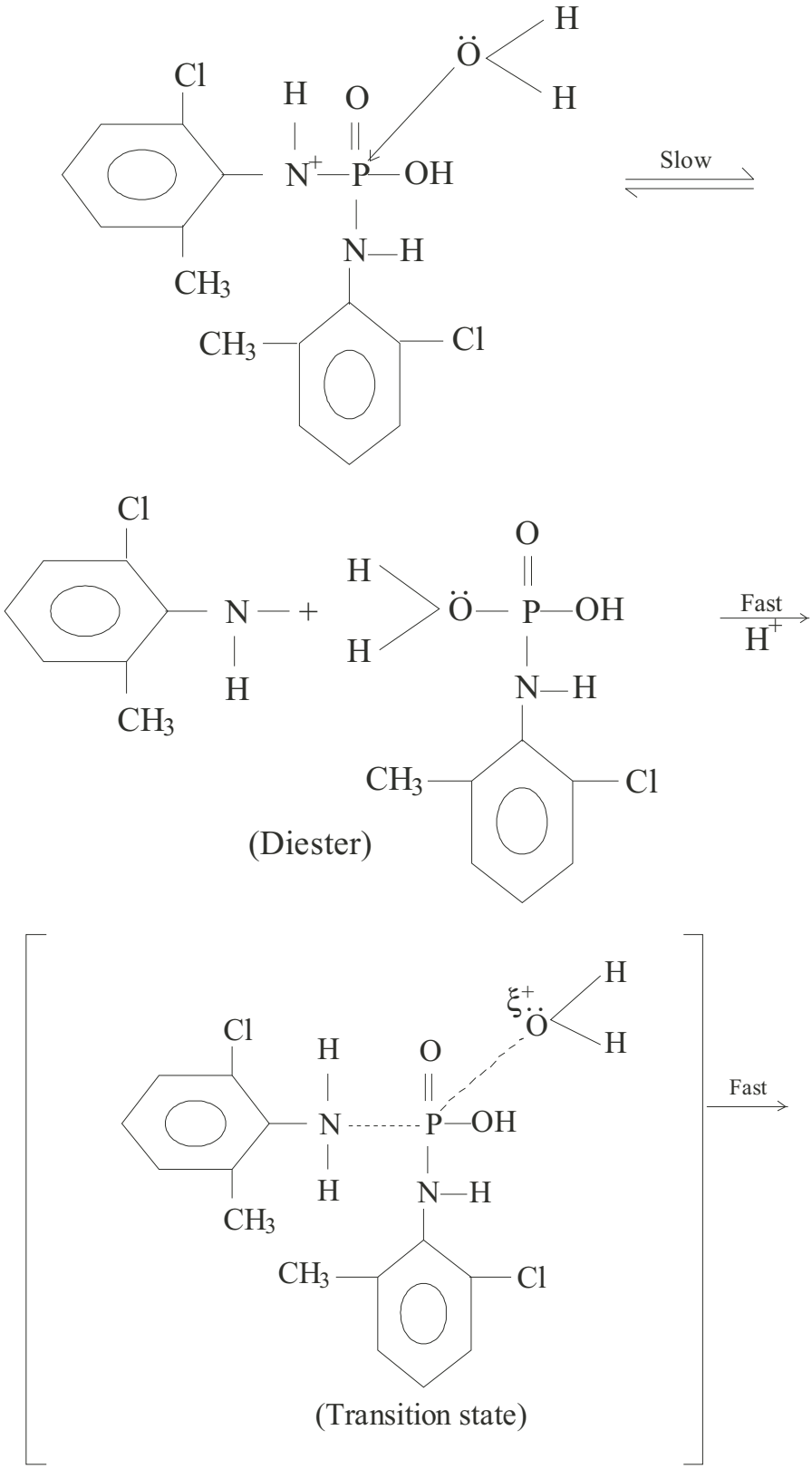

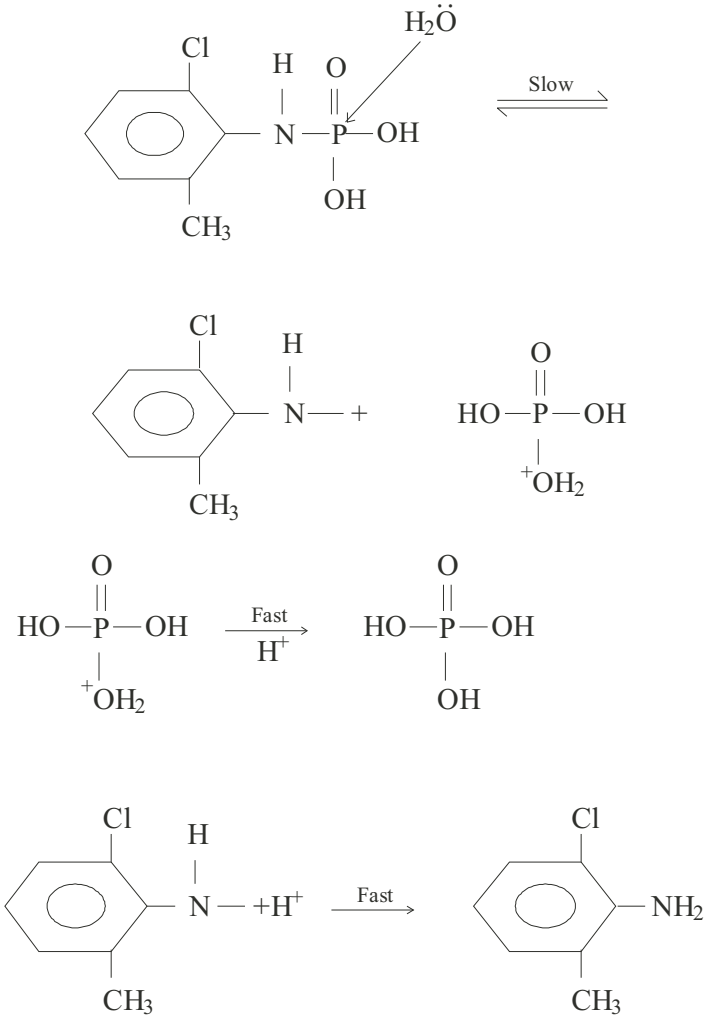

(Parent compound)

Bibliography

1. Khorana H.G., "Some recent development in the chemistry of phosphate esters of bilogical interest" John willey and Sons. Inc. New York (1961)
2. Metcalt R.L., organic insecticides. Inter Science Publishers, New York, Chap. XI, p. 225-261 (1955).
3. Schrader G., B.I.O.S. Find Rept. 714, Item 8 (1947)
4. Synthesis and antiviral activity, C.A. 54, 1303 (1954)
5. Audreith L.E. and Toy A.D.E., N-substituted derivates of phosphoryl triamide, J.Am. Chem. Soc. 64, 1553 (1942)
6. Harry R. Gamrath and John K. Gaver, C.A. 47, 4367 (1953)
7. A. Kithara, T. Kobayshi and T. Tachibana, T.Phy. Chem. 66, 363 (1962)
8. Norman E.F., Hitchock Robert, A.C. Corswelt Rotier and Derbysire, E.Fr. 1, 391, 042 (1965)
9. Maquire MH and Show G., J. Chem. Soc. 1979 82 (1953)
10. Bunton C.A., Chem. Edu. Jan. (1969)
11. Dixit D.K., Ph.d. Thesis Agra University, Agra (1991).
12. Chauhan J.S., Ph.D. Thesis Jiwaji Univ. Gwalior (1995)
13. Mishra Preeti, Ph.D. Thesis Jiwaji Univ. Gwalior (1992)
14. Mishra S.K., Ph.D. Thesis Jiwaji Univ. Gwalior (1991)
15. Singh I.K., M.Phil. Thesis, Jiwaji Univ. Gwalior (1987)
16. Tewari B.K. Ph.D. Thesis, Agra University,Agra (1985)
17. Dubey R., Ph.d. Thesis, Jiwaji Univ., Gwalior (1993)
18. Shivdhonkar Vaishali, Ph.D. Thesis Jiwaji Univ., Gwalior (1997)
19. Singh Pratap and Kumar Abanish, J. Of Indian Council of Chemists, Vol. 28, No. 1, P-56-69 (2011)
20. Patel Anil, Ph.D. Thesis, Dr. B.R.A. Univ., Agra (2012)
21. Chaudhary Gaurav, Ph.D. Thesis Dr. B.R.A. Univ., Agra (2013)

22. Singh Sanchita, Ph.D. Thesis Dr. B.R.A. Univ., (2014)
23. Kumar Abanish, Pak, J.Sci., Ind. Res.Ser. A : Phys. Sci. 58 (3) 117-122 (2015)
24. Chaudhary Amit, IJET, Vol. 6, Issue Oct. 2015, Pg. 39-50 (2015)
25. Chaudhary Amit IJSR, Vol. 5, Issue 4, April 2016, Pg. 1203-1208 (2016)
26. Chaudhary Amit, AJST, Vol. 8, Issue 9, Sept. 2017, Pg. 5422-5426 (2017)
27. Chaudhary Amit IMJDR Vol. 35, Issue 35, July Sept. 2017, Pg. 72-79 (2017)
28. Huges E.D. and Ingold C.K., J. Chem. Soc. 244 (1935)
29. Sagne A.N., Ph.D. Thesis, Jiwaji Univ. Gwalior (1982)
30. Chaturvedi Kumud, Ph.d. Thesis, Dr. B.R.A. University, Agra (1999)
31. Sahani Veena Ph.D. Thesiis, Jiwaji Univ, Gwalior (1984)
32. Kulshrestha (Miss) K., Ph.D. Thesis, Jiwaji Univ., Gwalior (1982)
33. Jain Pradeep, Ph.d. Thesis Jiwaji Univ. Gwalior (1982)
34. Chanley J.D., and feageson E., J. Am. Chem. Soc., 77, 4002 (1955)
35. Bhoite A.K. “Kinetic study of hydrolysis of compounds containing C.N. and P (C-N-P) linkage”. Ph.D. Thesis, Jiwaji Univ., Gwalior (1977)
36. Das K.B., Ph.D. Thesis, Jiwaji Univ., Gwalior (1995)

ISSN : 2349-2597

Study Of Hydromagnetic Spherical Shock Wave In Non-Ideal Gas.

Dr. C.V. Singh
Department of Physics Agra College Agra 282001
Email : drcvsingph@Rediffmail.com

Abstract : Study of hydromagnetic spherical shock wave in non ideal gas have been studied by using similarly method. The equation of state in the suitable form for such gases, is found to be much accurate at low density region strong shock propagation in uniform medium at rest is taken into account assuming the total energy at the flow to be constant. Numerical solutions are obtained for various valus of the parameter.

Key Words : Sheprical shock wave, non-ideal gas.

1. **Introduction :** The study of hydromagnetic spherical shock wave for both, uniform and non-uniform ideal gas have been studied by number of author's by using Sedov (1959) Similarly method, Laumbach and Probstein (1969) Singh and Srivastava (1981) Studied the problems for spherical symmetry in ideal gas. In the present paper we have studied. Only for the case of spherical symmetry for self similar flows of a non-ideal gas. This type of problem in non ideal gas has its importance at high temperature. The equation of state for non-ideal gas such as low density gases is different from that of ideal gases.
2. **Equation of State :** The equation of states for a non-ideal gas is obtained by considering an expansion of the pressure p in powers at the density ρ.

$$P = \Gamma\rho\ T[1 + \rho c_1(T) + \rho^2 c_2(T) + ...]$$

where Γ is the gas constant p, ρ and T are the pressure, density and temperature of the non-ideal gas. Resprectively and C1(T), C2(T) are viril coefficients. The first term in the expansion.

Corresponds to an ideal gas. The second term is obtained by taking into account the interaction between the groups of three, four etc. Molecules. In the high temperature range the coefficient its $c_1(T)$ and $c_2(T)$ tend to constant values equal to b and $(5/8)b^2$ respectively. For gases $b\rho << 1$. b being the internal volume of the molecules and there for it is sufficient to consider the equation of state in the form (Anisimov and spiner, (1972), Singh and Singh 1998, ojha 2002).

$$p = \Gamma\rho T[1 + b\rho] \qquad ...(1)$$

In this equation the correction to pressure is missing due to neglect of second and higher powers of $b\rho$ *i.e.*, due to neglect of interaction between groups of three, four etc molecules of the gas. Roberts and Wu (1996, 2003) have used an quivalent equation of state to study th shock theory of sonolumminescene. The internal energy a per unit mass of the non ideal gas is given by Singh and Singh (1998) and ojha 2002) as

$$e = b\rho\ (\gamma - 1)\ (1 + b\rho) \qquad ...(2)$$

Where γ is the adiabatic index. Equation (2) implies that

$$C_P - C_V = \Gamma\ (1 + b^2\rho^2)/(1 + 2b\rho)] = \Gamma$$

Neglecting the second and higher powers at bρ. Here C_P and C_V are the specific heats of the gas at constant pressure and constant volume respectively.

(3) Boundary Conditions : One dimensional fundamental equations of motion in spherical symmetry, taking invisilid non ideal gas for mass, momentum and energy are.

$$\frac{D\rho}{Dt}+\rho\frac{\partial u}{\partial r}+\frac{2\rho u}{r}=0 \qquad ...(3.1)$$

$$\frac{Du}{Dt}+\frac{1}{\rho}\left(\frac{\partial p}{\partial r}\right)=0 \qquad ...(3.2)$$

$$\frac{De}{DA}+p\frac{D}{Dt}\left(\frac{1}{\rho}\right)=0 \qquad ...(3.3)$$

Where the specific internal energy

$$e=\frac{p}{(\gamma-1)(1+b\rho)} \qquad ...(3.4)$$

which implies that

$$C_P-C_V=\frac{T\left(\frac{\partial p}{\partial T}\right)_v}{\left(\frac{\partial T}{\partial V}\right)_p}\cong\Gamma \qquad ...(3.5)$$

a result which follows from the equation. (1) provided the term in $b^2\rho^2$ is ignored r is the single co-ordinate being radial in spherically symmetric flow.

The jump conditions to those of strong shocks are

$$u_1=(1-\beta)u \qquad ...(3.6)$$

$$p_1=(1-\beta)\rho_0 u^2 \qquad ...(3.7)$$

$$\rho_1=\rho_0/\beta \qquad ...(3.8)$$

where $\beta=\dfrac{(\gamma-1-\gamma)+\sqrt{[(\rho-1-\alpha)^2+4\alpha(\gamma+1)]}}{2(\gamma+1)}$

while $\alpha=\beta\rho_0(\gamma+1)$ ...(3.10)

(4) Similarity solution : The solutions of the equations from 3.1 – 3.3 in the form.

$$u=\frac{r}{t}U(n) \qquad ...4.1$$

$$p=r^k+2\,t^\lambda\text{ -2(n)} \qquad ...4.2$$

$$\rho=r^k\,t^\lambda\,\Omega(n) \qquad ...4.3$$

$$n=r^a\,t^b \qquad ...4.4$$

where k, λ, a and b are constants we take n_0 = constant (shock surface). This choice fixes velocity of the shock surface as $u=-\dfrac{bR}{at}$ ...4.5

which represents an outgoing shock surface it $a<0$, R is the radius at the shock surface at time t.

By the direct substitution of the equations. 4.1 – 4.4 in the equations of motion and shock. Conditions. We find that similarity, conditions are. Compatible when.

$$K=0,\ \lambda=0,\ \frac{a}{b}=-2.5 \qquad ...4.6$$

Now the equations 3.1 – 3.3 after some manipulation. May be written as.

$$\frac{dW}{dx} = \frac{[2\beta(1-\beta)KSW/x - 3\beta(1-\beta)S - 3(x-W)]\frac{WD}{2}}{[D(x-W)^2 - \beta(1-\beta)KS]} \quad ...4.7$$

$$\frac{dD}{dx} = \frac{D}{(x-W)}\left[\frac{dW}{dx} + \frac{2W}{x}\right] \quad ...4.8$$

$$\frac{dS}{dx} = \frac{KS}{(x-W)}\left[\frac{dW}{dx} + \frac{2W}{x} - \frac{3}{k}\right] \quad ...4.9$$

Where $K = \left[-\frac{2\alpha D + (\gamma+1)\beta}{\alpha D + (\gamma+1)} + \frac{(\gamma-1)(\alpha D + (\rho+1)\beta}{(\gamma+1)\beta}\right]$

$x = \frac{r}{R}$, $W = \frac{u}{v}$, $D = \frac{\rho}{\rho_1}$ and $S = \frac{\rho}{\rho_1}$

At the shock boundary we have

$x = 1$,d $W = (1 - \beta)$, $D = 1$ and $S = 1$

(5) Result and discussion : It is observed that singularity lies up to $x = 0.25$, 0.50, 0.62 and 0.79 for a = 0.025, 0.050, 0.075 and 0.10 respectively. So we conclude that as the medium deviates from the ideal gas nature or as increases the distance between the shocks front and inner expanding surface decreases. It has been also marked that the velocity distribution at the shock surface is not same for all the values of α as is usually seen. It is due to the fact that the density ratio changes with α, which affects the distribution of velocity.

References

1. Sedov, L. I. (1959). Similarity and Dimensional Methods in Mechanics. Academic Press, New York.
2. Laumbach, D. D. and R. F. Probstein (1970). A point explosion in a cold exponential atmosphere: part 2. Radiating flow. Journal of Fluid Mechanics 40, 833-858
3. Singh, J. B. (1982). A self-similar flow in generalized Roche model with increasing energy. Astrophysics and Space Science 88, 269-275
4. Anisimov (1972)
5. Singh, J. B. and S. K. Pandey (1988). Analytical Solution of Magnetogasdynamic cylindrical shock waves in self-gravitating and rotating gas,II. Astrophysics and Space Science 221227.
6. Ojha, S. N., H. S Takhar and O. Nath (1998). Dynamical behaviour of an unstable magnetic star. Journal of MHD Plasma Research 8, 1-14.
7. Chaturani, P. (1970). Strong cylindrical shocks in a rotating gas. Applied Science Research 23, 43653.
8. Elliott, L. A. (1960). Similarity methods in radiation hydrodynamics. In Proceedings of the Royal Society of London 258, 287-301.
9. Ghoneim, A. F., M. M. Kamel, S. A. Berger and A. K. Oppenheim (1982). Effect of internal heat transfer on the structure of self-similar blast waves. Journal of Fluid Mechanics 117, 473491.
10. Gretler, W. and R. Regenfelder (2005). Strong shock wave generated by a piston moving in a dust laden gas under isothermal conduction. European Journal of Mechanics-B/Fluids 24, 205-218.
11. Korobeinikov, V. P. (1976). Problems in the theory of point explosion in gases. In Proceedings of the Steklov Institute of Mathematics, American Mathematical Society 119.

ISSN : 2349-2597

Relative Toxicity Of Neem-Based Pesticides On Tobacco Caterpillar Of Spodoptera Litura (Fabr.)

Dr. Manoj Kumar
Deptt. of Zoology, Smt. G.D.PG College, Allipur Barwara, Kasganj
manoj9412896264@gmail.com

Abstract

Neem-based pesticides under laboratory conditions of tobacco caterpillar of spodopter litura (Fabr.). The pesticides of various neem formulation the bioassay technique was employed and the mortality counts. The details of probit analysis to get the LC_{90} value of the used formulations have been worked out against the test insects. The probit analysis of heterogemity, regression equation, LC_{90} values and the relative toxicity of neem based pesticides.

Introduction :

Spodoptera litura (Fabr.) commonly known as tobacco caterpillar is an economically important polyphagous pest of seasonal crops in many countries including India. The present investigation to find out the relative toxicity of certain neem based pesticides against tobacco caterpillar spodopter litura (Fabr.) under laboratory conditions. Various workers tried to control the tobacco leaf crops by using chemical and synthetic pesticides**1-3** but they are dangerous to human. Some considerable work has been carried out on bio-efficacy of various neem products**4-7** but very little literature is available on the toxicity effect of neem based pesticides.

The proposed work has following objectives to find out efficacy of some neem based pesticides to control plant origin for pest control has increased spectacularly in the last few decades. Because of the drawbacks of conventional synthetic chemicals on agroecological systems, interest in botanical insecticides as alternatives to synthetic insecticides in cropping system management continues to grow.

Material and Methods :

The concentrations resulting in 20-80% mortality of experimental insect biopassary test by film method was done to work out the LC_{90} values. For the preparation of pesticidal film, both lids of pestridish (10cm diameter) were sprayed with 1ml of each concentration of the pesticides under the potter's tower at the constant pressure of 4lbs/sq. inch. The petridishes were shaken under the electric fan for about 10-15min. till liquid of lids was evaporated leaving behind an uniform dry film of the formulation on glass surface. The treated insects were transferred after two hours to glass jars and fresh leaf was given to them as food. The examination of the insects was done individually for assessment of toxic effect, mortality counts which were taken to the insecticidal film. The data were subjected to analysis to obtain LC90 values from which relative toxicity were calculated. The insects were colonized for only two generations before the research was conducted.

Table : Relative Toxicity, Regression Equation and LC_{90} Values of Various Neem Formulation against Spodoptera litura (Fabr.)

S. No.	Neem based Pesticides	Heterogenity X^2 (6)	Regression Equation (Y)	Values LC_{90}	Relative Toxicity
1.	Neemazal	7.5524	-1.6069 + 1.7468x	3.293732	2.005738
2.	Bioneem	2.0647	-1.0067 + 1.5499x	5.040677	1.310610
3.	Neem Gold	3.3795	-1.0936 + 1.5347x	6.391340	1.033643
4	Nimbicidine	4.3004	-1.5919 + 1.6335x	6.606365	1.000000
5.	Achook	----	-1.3749 + 1.5574x	8.243448	0.801407

Y= Probit Kill, **X^2(6)** = Neem based Formulations and log concentration

X= Log Concentration **LC_{90}** = Concentration calculated to give 90% mortality

Results and Discussion :

The neem-based pesticides tested by film method against tobacco caterpillar Spodoptera litura (Fabr.) were not equally effective (Table). The studies on toxicity of various neem based pesticides made against Spodoptera litura (Fabr.) reveal that neemazal was the most toxic among all the tested pesticides and next in order were bioneem, neemgold, nimbicidine and achook such observations were also supported by other workers8.

The relative toxicity on LC_{90} values basis could be arranged in the descending order such as neemazal > bioneem > neemglod > nimbicidine > achook. Results on relative toxicity of various neem based pesticides against Spodoptra litura (Fabr.) has shown that neemazal 1%EC was most effective (due to presence of 10,000ppm Azadirachtin compound) in reducing the insect population as as it elicted maximum toxicity against Spodoptra litura (Fabr.) The LC90 values of neemazal was minimum (3.293732) and maximum values (8.243448)was of achook so the relative toxicity was maximum of neemazal (2.005738) and minimum of achook (0.801407) for Spodoptra litura (Fabr.). Since there was no published information on the toxicity of neemazal against tobacco leaf pest. The result obtained from laboratory studies on feeding of S. litura are in conformity with the antifeedant effects of neem seed kernel suspension against S. litura (Metspalu et al.(2010) and Eziah et al. (2011)).

Reference :

1. Birah, A., Alpana, S.B., Mahapatro, G.K. and Gupta, G.P. **(2008)** Toxicity of emamectin benzoate against tobacco caterpillar (Spodoptera litura) by three different assay techniques, *Indian Journal of Entomology*, 70(3) 200-205.
2. Kaur, A., Kang, B.K. and Singh, B., **(2007)** Toxicity of different insecticides against Spodoptera litura (Fabricius) in Punjab, India. *Pesticide Research Journal*, 19(1) 47-50.
3. Dhir, B.C., Mohapatra, H.K. and Senapati, B. **(1992)** Assessment of crop loss in groundnut due to tobacco caterpillar Spodoptera litura (F.), *Indian Journal of Plant Protection*, 20, 215-217.
4. Shankarganesh, K., Dhingra, S. and Rao, G.R. **(2007)** Relative toxicity of synthetic insecticide against different populations of Spodoptera litura (Fabricius), *Pesticide Research Journal*, 19(2) 172-175.
5. Desai, S.D. and Desai, B.D. **(2000)** Studies on insecticidal properties of some plants, *Shashpa,* 7 (1), 85 -88.
6. Armes, N.J., Wightman, J.A., Jadhav, D.R. and Rao, G.V.R. **(1997)** Status of insecticide resistance in Spodoptera litura in Andhra Pradesh, India, *Pesticide Science*, 50 240-248.
7. Stanley, J., Chandrasekaran, S., Regupathy, A. and Jasmine, R.S. **(2006)** Base line toxicity of emamectin and spinosad to Spodoptera litura, *Annals of Plant Protection Science* 14(2), 346-349.
8. Talikoti, L.S., Sridevi, D. and Ratnasudhakar, T. **(2012)** Relative toxicity of insect growth regulators against tobacco caterpillar, Spodoptera litura (Fabricius), *J. Ent. Res.*, 36(1), 31-34.

9. Metspalu, K., Jogar, A., Ploomi, K., Hiiesaar, I., Kivimägi and Luik, A. **(2010)** Effects of biopesticide Neem EC on the Mamestra brassicae L.(Lepidoptera, Noctuidae) *L. Agronomy Research*, 8(Sp 2), 465–470.
10. Eziah, V.Y., Sackey, I., Boateng, B. A. and Obeng-Ofori, D. **(2011)** Bioefficacy of neem oil (Calneem™), a botanicalinsecticide against the tropical warehouse moth, *Ephestia cautella. International Research Journal of Agricultural Science and Soil Science*, 1(7):242-248.

ISSN : 2349-2597

The Studies Of Fractional Ionic Character Of Alkali Halide And Alkaline Earth Chalcoginides Based On Energy Gap Model

Dr. Alok Saxena and Dr. Prabhakar Singh
Assistant Professor, Shri Chitra Gupt (P.G.) College, Mainpuri
aloksaxena109@gmail.com

Abstract :

In this paper the value of fractional ionic character F; have been calculated in the present study using the above mentioned three models. A graphical analysis has also been performed for different groups of compounds under condition. We have used the value of C based on electronic dielectric constant data to calculated the value of r_α and r_s, Ionic r_α and r_s have been used as important parameter in the theory of chemical bonding. The radii are of additive nature, we have calculated the inter ionic separations by taking the sum of appropriate ionic radii.

Introduction :

The radius of an atom in a crystal does not have an accurate meaning and can have various definitions. The Idea of crystal radii is widely employed by physicists, chemist and crystallographer. In investigations the concept of additive radii providing the observed nearest neighbour distance within a given family of salts is very useful. There is exist several sets of additive crystal radii based on different approaches.[1-9] The X-Ray scattering experiments proved, however that in the real crystal the radii become indivisual crystal dependent. The theoretical value for the rock salt structure crystal, obtained using different theoretical models, also predict value which change from crystal to crystal.

The present radii change from crystal to crystal. Therefore this average value can be used only for the 12 alkaline earth-chalcogenides under consideration. One can state that it is possible to relate the ionic sizes in crystals to their optical properties. However, the concept of ionic radii can have different meanings. The ionic radii in the sense given here may be used to discuss the relationship between density and refractive index and to calculate some non-linear optical phenomena, for example the third order non-linear susceptibility and its anisotropy and the quadratic electro-optic effect. The lattice parameter or nearest neighbour interionic separations can be divided into two parts by introducing the concept of ionic radii such that.

$$R = r_+ + r_- \qquad .....(1)$$

Where r+ is the radii of cation and r is the radii of anion and R is the nearest neighbour interionic separation.

Results and data analysis :

The electron density measurements also reveal that ions are nearly spherical and one can make use of equation (1) to obtain additive radii characteristics of ions. It is evident from Table (1) that ionic radii estimated by traditional workers deviate significantly from the corresponding values based on electron density measurements being smaller for cations and larger for anions by about 0.02 nm. These deviations have been explained by Tosi in terms of Fajan's rule of the loosening of effect of cations and the tight ening effect of anions in the crystalline state relative to the free state.[10] These effects arise ue to the existence of the coulomb or Medelung electrostatic potential in crystals which is negative at the site of cations

and positive at the site of anions. The traditional radii due to pauling, Goldschmidt and Zachariasen were identified as the free state radii as they were based on size-screening parameters corresponding to the free state.

A set of additive radii on the basis of available data on electron density measurements is compiled in Table (2). We note from this table that the maximum number of measurements have been reported for NaCl crystal. Moreover the values of r_+ and r_- for Na^+ and Cl^- ions derived from various electron density measurements are in close agreement with each other. This is not the case for other crystals. For example, for LiF crystal there exist more then one electron density measurements but the radii estimated from them differ substantially from each other. To start with we choose 0.118 nm for the radius of Na^+ and 0.163 nm for the radius of Cl^-. These are the average values based on the four electron density measurements in NaCl crystal values of radii for other alkali and halide ions have been calculated from the additivity relation using the experimental values of cation-anion separations. Average values of the additive radii have been reported in table (3).

Table – 1
Comparison of Traditional Sets of Ionic Radii with Those Based on Electron Density Measurements

ION	Radii (10^{-1} nm)			
Li^+	0.60	0.78	0.68	0.92
Na^+	0.95	0.98	0.98	1.18
K^+	1.33	1.33	1.33	1.51
Rb^+	1.48	1.49	1.48	1.71
Cs^+	1.69	1.65	1.67	---
F^-	1.36	1.33	1.33	1.16
Cl^-	1.81	1.81	1.81	1.65
Br^-	1.95	1.96	1.95	1.73
I^-	2.16	2.20	2.16	---

Table – 2
Values of Ionic Radii Estimated Directly from the Electron Density Measurements (All Values in 10^{-1} nm)

CRYSTALS	r^+	r^-
LiF	0.92 0.78	1.09 1.23
NaCl	1.17 1.18 1.15 1.21	1.65 1.64 1.67 1.61
KCl	1.45	1.70

KBr	1.57	1.73
RbCl	1.71	1.58

Table – 3
Comparison of Traditional Sets of Ionic Radii with Those Based on Electron Density Measurements

ION	$r^+(r^-)$	C_n	S
Li^+	0.93	1.69	1.18
Na^+	1.18	6.12	5.81
K^+	1.51	10.94	11.75
Rb^+	1.64	15.43	27.59
Cs^+	1.90	23.14	42.82
F^-	1.13	6.12	3.58
Cl^-	1.63	10.94	10.29
Br^-	1.80	15.43	26.43
I^-	2.05	23.14	41.71

Reference :

1. Wasastjerna, J.A. : Commentat. Physico-math., 1.1 (1923).
2. Goldschmidt, V.M., Barth, T., Lunde, G. and Zachariasen, W.H. : Skr.norske Vidensk-Akad., 1, Mat.-naturv, **K1**, No. 2, (1926).
3. Pauling, L. : J. Am. Chem. Soc., **49**, 765 (1927).
4. Zachariasen, W.H. : Z. Kristallogr., **80**, 137 (1931).
5. Ahrens, L.H. : Geochim Cosmo chim., Acta, **2**, 155 (1952)
6. Gourary, B.S. & Adrian, F.J. : Solid St. Phys., **10**, 127 (1960).
7. Slater, J.C. : J. Chem. Phys., **41**, 3199 (1964).
8. Boswarva, I.M. : J. Phys. C., Solid St., Phys., **1**, 582 (1968).
9. Shannon, R.D. & Prewitt, C.T. : Acta Crystallogr., **B25**, 925 (1969).
10. Shankar, J., Agrawal, G.G. and Dutt, N. : Phys. Stat. Sol., **(b) 138**, 9 (1986).

ISSN : 2349-2597

Analysis Of Inverted Type High Temperature Equations Of State For Solids

Digpratap Singh
Department of Physics, Narain College, Shikohabad, Distt. Firozabad
Email : dpyadav.ncs@gmail.com

Abstract

The equation of state (EOS) is fundamentally important in studying the high temperature and high pressure properties of solids. In the present study we have therefore used the Roy-Roy EOS to obtain the results for volumes of NaCl and MgO at simultaneously elevated pressures and temperatures. Thermal pressure is an important physical quantity playing the central role in the evaluation of high temperature equations of state for solids we have determined the values of ΔP_{TH} for NaCl and CsCl.

Keywords : Equation of state, Thermal pressure, Diatomic solids.

Introduction :

Equations of state, not only an isothermal P (V,T) relations near ambient temperature, but also for wide ranges in temperature have become desirable in many high pressure-high temperature studies [1]. The EOS can be used for meaningful interpretation of physical and chemical phenomena at arbitrary temperatures. In experimental studies [2,4] the volumes are measured with the help of X-ray diffraction techniques for a solid at specified condition of pressure and temperature. Thus a direct comparison with experimental data is possible only if an EOS can be used to predict volumes taking pressure and temperature as input, non-invented type EOS are difficult to be solved for getting V(T, P). On the other hand an inverted type such as that due to Roy and Roy which yields good agreement with the well established non-inverted equations and is also consistent with the Stacey criterion $\frac{B}{P} = B'_{\infty}$ in the limit $P \to \infty$ can be used to predict V (P, T). In the present study we have therefore used the Roy-Roy EOS which can be expressed as [5]

$$\frac{V}{V_0} = \left[1 + aP\left(1 + bP\right)^c\right]^{-1} \text{ ---------- [1]}$$

with

$$a = \frac{1}{B_0}$$

$$b = 4B_0B_0'' - 5B_0'^2 + 6B_0' - 1/6B_0(1 - B_0')$$

$$c = 3(1 - B_0')^2 / (4B_0B_0'' - B_0'^2 + 6B_0' - 1)$$

to obtain the results for volumes of NaCl and MgO at simultaneously pressures and temperatures.

2. Evaluation of Thermal pressure

At high temperatures Eqn (1) can be rewritten as –

$$\frac{V}{V_0} = \left[1 + aP^*\left(1 + bP^*\right)^c\right]^{-1} \text{ ---------- [2]}$$

Here $P^* = P - \Delta P_{TH}$ ---------- [3]

Equation of state for a solid describing P-V-T relationship is expressed as follows [1]

$$P(V,T) = P(V,T_0) + \Delta P_{TH} \quad \text{---------- (4)}$$

Where P (V,T) is the pressure at volume V and temperature T. P (V, T_0) is the isothermal pressure- volume relationship at room temperature and ΔP_{TH} is the difference in the values of thermal pressures at temperature T and that at room temperature. Thus we can write

$$\Delta P_{TH} = P_{TH}(T) - P_{TH}(T_0) \quad \text{----------(5)}$$

Maxwell's thermodynamic relationship for thermal pressure can be written as –

$$\left(\frac{\partial P}{\partial T}\right)_V = \left(\frac{\partial P_{TH}}{\partial T}\right)_V = \alpha B_T \quad \text{----------(6)}$$

Equations (6) can be integrated to yield

$$\Delta P_{TH} = \int_{T_0}^{T} (\alpha B_T) dT \quad \text{----------(7)}$$

$$\Delta P_{TH} = \alpha B_T (T - T_0) \quad \text{----------(8)}$$

Where α is the volume thermal expansion coefficient and T_0 is the room temperature. Values of change in thermal pressure ΔP_{TH} are evaluated using the product $\alpha B_T = 6.3x10^{-3}$ $GPaK^{-1}$ for MgO [1] and 2.84 x 10^{-3} $GPaK^{-1}$ for NaCl [6] The input data for MgO are B_0= 157 GPa, $B_0' = 4.37$ and $B_0'' = -0.04(GPa)^{-1}$ reported by Hama and Suito [7]. For NaCl B_0=24GPa, $B_0' = 5.5$ from Anderson [8] and $B_0'' = -0.223(GPa)^{-1}$ based on experimental ultrasonic data [8]. The results are presented in Tables 1 and 2 and compared with the available experimental data [1, 2, 4, 6].

In calculating the values of thermal pressure, it has been assumed that ΔP_{TH} depends on temperature alone and is independent of volume or compression. In order to demonstrate that this is a good approximation we can use the P-V-T data for NaCl and CsCl reported by Decker [9] and determine the values of ΔP_{TH} using the relationship

$$\Delta P_{TH} = P(V,T) - P(V,T_0) \quad \text{----------(9)}$$

Values of ΔP_{TH} thus determined for NaCl and CsCl are given in Tables 3 and respectively.

Table : 1. Values of V/Vo of MgO as function of pressure and temperature calculated from (a) Roy-Roy equation (1) (b) Experimental data [4]

T(K)	P(GPa)	(a)	(b)
300	11.5	0.9382	0.9388
300	12.9	0.9318	0.9328
300	15.1	0.9224	0.926
300	15.7	0.9199	0.9209
300	17.9	0.9109	0.9154
300	19.5	0.9047	0.9049
300	20	0.9028	0.8998
300	21	0.8989	0.9012

300	22.6	0.8931	0.8951
300	24.3	0.8871	0.8849
300	26.6	0.8792	0.8786
300	29.1	0.8709	0.8722
300	34.3	0.8549	0.8552
300	36.2	0.8494	0.8525
300	39.2	0.8409	0.8387
300	44.7	0.8264	0.8269
1750	25.5	0.9171	0.9161
1849	51.6	0.8338	0.8326
1865	13.6	0.9776	0.9695
1870	51.8	0.8335	0.8347
1900	52.1	0.8333	0.8348
1908	48	0.8445	0.8452
1927	16.2	0.9655	0.9627
1928	52.6	0.8325	0.8305
1934	24	0.9283	0.926
1950	41.5	0.8646	0.8619
1950	28.3	0.9109	0.9134
1966	52.5	0.8333	0.834
1975	35	0.8867	0.8838
1980	29.3	0.9077	0.9088
2000	23.9	0.9305	0.9378
2000	25	0.9257	0.9225
2008	31.7	0.8993	0.909
2015	20.5	0.9466	0.9479
2040	35	0.8881	0.8869
2050	48.2	0.8464	0.8453
2064	42.2	0.8646	0.8631
2067	48.2	0.8467	0.8433
2097	31.4	0.9023	0.9021
2160	24	0.9345	0.9315
2188	22.5	0.9423	0.9451
2210	34.8	0.8924	0.8897
2223	44.5	0.8606	0.8875
2315	31.4	0.9077	0.9037
2320	34.7	0.8953	0.8915
2349	24.5	0.9378	0.9464
2374	34.2	0.8986	0.8993
2474	21.3	0.9569	0.9606

Table : 2. Values of $\frac{V}{V_0}$ of NaCl as a Function of pressure and temperature calculated from (a) Roy-Roy equation (1) (b) Experimental data [6].

P	T= 298 K		T= 373K	
(GPa)	(a)	(b)	(a)	(b)
0	1	1	1.0091	1.0093
1	0.9631	0.9627	0.9703	0.9701
2	0.9334	0.9324	0.9392	0.9385
3	0.9085	0.9067	0.9135	0.9119
4	0.8870	0.8845	0.8914	0.8890
5	0.8682	0.8645	0.8720	0.8689
10	0.7979	0.7910	0.8003	0.7935
15	0.7493	0.7397	0.7511	0.7416
20	0.7120	0.7004	0.7134	0.7019
25	0.6818	0.6685	0.6830	0.6697
30	0.6564	0.6416	0.6574	0.6426

P	T= 473 K		T= 573K	
(GPa)	(a)	(b)	(a)	(b)
0	1.0223	1.0225	1.0366	1.0368
1	0.9803	0.9804	0.9911	0.9913
2	0.9474	0.9469	0.9561	0.9558
3	0.9204	0.9191	0.9276	0.9266
4	0.9020	0.8953	0.9035	0.9018
5	0.8773	0.8744	0.8827	0.8801
10	0.8036	0.7971	0.8070	0.8007
15	0.7535	0.7442	0.7560	0.7468
20	0.7154	0.7039	0.7173	0.7060
25	0.6845	0.6714	0.6861	0.6731
30	0.6587	0.6441	0.6601	0.6455

P	T= 673 K		T= 773K	
(GPa)	(a)	(b)	(a)	(b)
0	1.0524	1.0523	1.0699	1.0691
1	1.0027	1.0029	1.0153	1.0153
2	0.9653	0.9652	0.9750	0.9750
3	0.9351	0.9344	0.9431	0.9426
4	0.9100	0.9085	0.9167	0.9155
5	0.8884	0.8861	0.8942	0.8922
10	0.8105	0.8043	0.8140	0.8081
15	0.7585	0.7494	0.7610	0.7522
20	0.7193	0.7080	0.7213	0.7102
25	0.6878	0.6748	0.6894	0.6766
30	0.6614	0.6470	0.6628	0.6485

Table No. 3. Values For ? P_{TH}= P(T)-P (T_0) where T_0= 298 K for NaCl.

V/Vo	T=373K	T=473K	T=573K	T=773K	T=1073K
	? P_{TH} (GPa)	? P_{TH} (GPa)	? P_{TH} (GPa)	? P_{TH} (GPa)	? P_{TH} (GPa)

1	0.213	0.500	0.789	1.372	2.248
0.994	0.213	0.500	0.790	1.372	2.249
0.988	0.212	0.499	0.789	1.371	2.249
0.982	0.213	0.500	0.790	1.372	2.250
0.976	0.212	0.500	0.789	1.372	2.250
0.970	0.212	0.499	0.789	1.372	2250
0.964	0.213	0.500	0.790	1.373	2.251
0.959	0.212	0.500	0.789	1.373	2.251
0.953	0.213	0.500	0.790	1.373	2.252
0.947	0.212	0.500	0.789	1.373	2.252
0.941	0.212	0.499	0.790	1.373	2.252
0.935	0.212	0.499	0.789	1.373	2.253
0.929	0.212	0.500	0.789	1.373	2.254
0.924	0.212	0.499	0.789	1.373	2.253
0.918	0.212	0.499	0.790	1.373	2.254
0.913	0.211	0.498	0.788	1.373	2.255
0.907	0.212	0.499	0.789	1.374	2.255
0.901	0.212	0.499	0.789	1.373	2.256
0.896	0212	0.499	0.789	1.374	2.256
0.890	0.212	0.499	0.789	1.373	2.256
0.885	0.212	0.498	0.789	1.374	2.256
0.879	0.211	0.498	0.788	1.373	2.257
0.874	0.211	0.498	0.788	1.373	2.257
0.868	0.211	0.498	0.788	1.374	2.257
0.863	0.211	0.498	0.788	1.373	2.257
0.857	0.210	0.497	0.787	1.373	2.257
0.852	0.211	0.497	0.788	1.373	2.257
0.847	0.211	0.498	0.788	1.373	2.254
0.841	0.211	0.497	0.788	1.374	2.258
0.836	0.210	0.497	0.787	1.373	2.258
0.831	0.210	0.497	0.787	1.373	2.258
0.825	0.210	0.496	0.787	1.373	2.258
0.820	0.210	0.496	0.786	1.373	2.258
0.815	0.210	0.496	0.786	1.373	2.259
0.809	0.219	0.496	0.786	1.372	2.259
0.804	0.210	0.496	0.786	1.373	2.259
0.799	0.209	0.495	0.786	1.372	2.259
0.794	0.209	0.495	0.786	1.372	2.260
0.789	0.209	0.495	0.785	1..372	2.260
0.784	0.210	0.495	0.786	1.3.73	2.260
0.779	0.209	0.495	0.785	1.372	2.261
0.774	0.209	0.494	0.785	1.373	2.260
0.769	0.209	0.495	0.785	1.372	2.261
0.764	0.208	0.494	0.784	1.371	2.260
0.759	0.209	0.494	0.785	1.372	2.261
0.754	0.209	0.494	0.784	1.372	2.261
0.749	0.208	0.493	0.783	1.371	2.261
0.744	0.208	0.493	0.783	1.371	2.261

0.739	0.208	0.493	0.783	1.371	2.261
0.734	0.208	0.493	0.783	1.371	2.261
0.729	0.207	0.492	0.783	1.371	2.261
0.700	0.206	0.491	0.781	1.369	2.261
0.696	0.206	0.491	0.781	1.369	2.262
0.691	0.206	0.490	0.780	1.369	2.262
0.686	0.205	0.489	0.779	1.368	2.261
0.682	0.205	0.489	0.779	1.368	2.261
0.677	0.205	0.489	0.779	1.368	2.261
0.672	0.205	0.489	0.779	1.368	2.261

Table No. 4. Values For ? P_{TH} = P(T)-P (T_0) Where T_0= 298 K for CsCl.

V/Vo	T=373K	T=437K	T=573K	T=773K	T=1073K
	? P_{TH} (GPa)	? P_{TH} (GPa)	? P_{TH} (GPa)	? P_{TH} (GPa)	? P_{TH} (GPa)
1	0.175	0.409	0.644	1.115	1.821
0.988	0.175	0.409	0.643	1.113	1.818
0.976	0.174	0.407	0.641	1.109	1.813
0.964	0.174	0.406	0.639	1.107	1.808
0.953	0.174	0.405	0.638	1.104	1.804
0.941	0.173	0.404	0.636	1.101	1.800
0.929	0.173	0.403	0.635	1.099	1.796
0.918	0.172	0.402	0.633	1.096	1.791
0.907	0.171	0.401	0.631	1.093	1.787
0.896	0.171	0.400	0.630	1.090	1.783
0.885	0.171	0.399	0.628	1.088	1.778
0.874	0.170	0.398	0.626	1.085	1.774
0.863	0.169	0.396	0.624	1.082	1.769
0.852	0.169	0.395	0.623	1.079	1.765
0.841	0.168	0.394	0.621	1.076	1.760
0.831	0.168	0.393	0.619	1.073	1.756
0.820	0.168	0.392	0.618	1.071	1.752
0.809	0.167	0.391	0.616	1.068	1.747
0.799	0.166	0.390	0.614	1.065	1.742
0.789	0.166	0.389	0.612	1.062	1.738
0.779	0.166	0.388	0.611	1.059	1.733
0.769	0.165	0.386	0.609	1.056	1.729
0.759	0.164	0.384	0.606	1.052	1.723
0.749	0.163	0.383	0.605	1.050	1.719
0.739	0.163	0.382	0.603	1.047	1.714
0.729	0.162	0.381	0.601	1.044	1.709
0.719	0.162	0.380	0.599	1.040	1.705
0.710	0.162	0.379	0.598	1.038	1.700
0.700	0.160	0.377	0.595	1.034	1.695
0.691	0.160	0.376	0.594	1.031	1.690
0.682	0.159	0.347	0.591	1.028	1.685
0.672	0.159	0.374	0.590	1.025	1.681
0.663	0.158	0.372	0.588	1.022	1.676
0.654	0.158	0.371	0.586	1.019	1.671

0.645	0.157	0.370	0.584	1.016	1.666
0.636	0.156	0.368	0.582	1.012	1.661
0.627	0.156	0.367	0.580	1.010	1.656
0.619	0.156	0.366	0.578	1.006	1.651
0.610	0.154	0.364	0.576	1.003	1.646
0.601	0.154	0.363	0.574	1.000	1.641
0.593	0.153	0.361	0.572	0.996	1.636
0.584	0.153	0.360	0.570	0.993	1.631
0.576	0.152	0.359	0.568	0.990	1.626

3. Conclusion

It is encouraging to note from Tables 1 and 2 that the results calculated from the Roy-Roy EOS are in good agreement with the experimental values [4,6]. It is found from the Tables 2 and 4 that for ΔP_{TH} remains nearly constant at a given value of temperature. The value of ΔP_{TH} increases significantly only when the temperature is increased. The value of ΔP_{TH} does not change appreciably with the increase in compression. However, this is not true for CsCl. The value of ΔP_{TH} at a given temperature in case of CsCl is found to decrease slowly but significantly as the compression is increased. At the highest compression $\frac{V}{V_0} = 0.576$ the values of ΔP_{TH} is about 10% smaller than its value at zero compression $\left(\frac{V}{V_0} = 1\right)$. This is true for the values at different temperatures ranging from 373 K to 1073 K.

Reference

1. Tallon J.L., J. Phys. Chem. Solids **41** (1980) 837.
2. MaO H.K., Bell P.M., J. Geophys. Res. **84** (1979) 45.
3. Boehler R., Kennedy G.C., Phys. Chem. Solids **41** (1980) 517.
4. Dewaele A., Fiquet G., Andrault D., Hausermann D., J. Geophysics. Res. **105** (2000) 2869.
5. Bose Roy P., Bos Roy S., J. Phys. Status Solidi b **226** (2001) 125.
6. Birch F., J. Geophys. Res. **91** (1986) 4949.
7. Hama J & Suito K. J. Phys. Condens Matter, **8** (1996), 67.
8. Hart S & Greenwood PH, Solid State Commoun, **46** (1983) 161
9. Decker D.L., J. Appl. Phys. **42** (1971) 3239.

ISSN : 2349-2597

Molecular Interaction Studies In Ultrasonic Testing.

Dr. Akanksha Rashmi
Department of Chemistry, Ch. Suraj Singh (P.G.) College, Jagir, Mainpuri
Dr. Ravi Pratap Singh
Ch. Suraj Singh (P.G.) College, Jagir, Mainpuri

Introduction:

Ultrasonic testing is a type of nondestructive testing commonly used to find flaws in materials and to measure the thickness of objects. Frequencies of 2 to MHz are common but for special purpose other frequencies are used. Inspection may be manual or automated and is an essential part of modern manufacturing processes. Most metal can be inspected as well as plastics and aerospace composites. Lower frequency ultrasound (50-500 kHz) can also be used to inspect less dense materials such as wood, concrete and cement. Ultrasonic velocity of sound waves in a medium is fundamentally related to the binding forces between the molecules. Ultrasonic velocities of the liquid mixtures consisting of polar and non-polar components are of considerable importance in understanding intermolecular interaction between component molecules and find application in several industrial between component molecules and find application in several industrial and technological processes. Ultrasonic velocity measurements have been employed extensively to detect and assess weak and strong molecular interactions in binary mixtures because mixes solvents find practical applications in many chemical and industrial processes.

Objective of the study

The objective of the study of this paper is to find out brief matter about Ultrasonic testing and its impact.

Hypothesis of the study

The Hypothesis of the study of this research paper has been made on the basis of Ultrasonic testing. These are as under :-

1. The present work deals with the study of acoustic behavior of furfural derivatives (furan and furfural) with organic solvents (Propanol-, Butanol-1and Pentanol-1).
2. The Present work will cover both theoretical and practical progress made in the field of molecular interaction as well as the development and applications of new experimental methods and techniques.
3. The molecular interactions influence the structural arrangement along with the shape of molecules.
4. The study of intermolecular interaction is of considerable importance of the elucidation of formation of complexes and plays an important role in the liquid mixture. Acoustic and thermodynamic studies of binary liquid mixtures are of considerable theoretical and technological importance as they provide a wide range of solvents of varying composition and properties.
5. Such studies are of particular significance owing to the practical application of mixed solvents in various analytical techniques, e.g, chromatography and liquid-liquid extraction.

Parameters

Most of the parameters involved in ultrasonic studies have been deduced by considering the propagation of acoustic waves of infinitesimal amplitude. But when sound waves of high amplitude propagate, non-linear effects occur such as harmonic distortion and

acoustic scattering. It has become of much interest to predict and extent of various kinds of non-linear effects in acoustics [1-6]. It is possible to obtain certain information about internal pressure, clustering, inter-molecular spacing etc., from the values of the non-linearity parameter, which plays a significant role in non-linear acoustic ranging from underwater acoustics to medicine. A number of experimental and theoretical investigations have been carried out on the non-linearity parameter of liquids.

Ultrasound can also be used for heat transfer in liquids. Ultrasonic cleaners, sometimes mistakenly called supersonic cleaners, are used at frequencies from 20 to 40kHz for jewellery, lenses and other optical parts, watches, dental instruments, surgical instruments, diving regulators and industrial parts. An ultrasonic cleaner works mostly by energy released from the collapse of millions of microscopic cavitations near the dirty surface. The bubbles made by cavitations collapse forming tiny jets directed at the surface. In order to understand the nature of this experimenter, as well as the methodology of data analysis, it is important to consider the nature of sound waves. Sound is propagated through a medium by longitudinal waves. A longitudinal waves is a type of periodic motion in which the displacement of the particles in the medium occurs in the same direction as the wave itself. This behavior is in contrast to a transverse wave, a common example of which is the spreading of circular ripples on the quiescent surface of water after a stone in thrown into the water. The water oscillates vertically (as the wave passes), but the wave moves outward, horizontally. There is little or no transport of the water itself along the direction of wave propagation. A general treatment of propagating sound waves through a medium results in the following expression for the wave velocity,

An important aspect of sound propagation is the fact that if the frequency of the sound being generated is high enough, i.e, audio frequencies which are between 10^3 and 10^{-4} Hz (oscillation per second), the compressions and rarefactions are established very rapidly as the sound wave moves through the medium. This condition means that heat transport between the compressed and rarefied regions of the medium and the surroundings is slow relative to the creative of the compressions and rarefactions. Thus, on a local basis, the compressions and rarefactions are carried out adiabatically. At much lower sound frequencies, on the other hand, it is possible to imagine that heat transport between the medium and the surroundings is fact enough to allow the medium to be compressed and expanded isothermally of the thermal mass of the surroundings is large enough. Accordingly the compressibility β_s can be described under constant-temperature or constant-energy condition, and one can thus distinguish between isothermal and adiabatic compressibilites of a substance β_T and β_s respectively.

Lagemann and dunbar was the first to point out the sound velocity approach for qualitative determination of the degree of association in liquids. Several techniques such as IR, NMR. Raman spectroscopy and Ultrasonic velocity have been used for the determination of molecular and ion-solvent interaction[7-17.]

The study of chemical effects of ultrasound is a rapidly growing research area. Some of the most important recent respects of sonochemistry have been its application in the synthesis and modification of both organic and inorganic materials. High-intensity ultrasound can induce a wide range of chemical and physical consequence. The chemical effects of ultrasound fall into three areas: homogeneous sonochemistry of liquids, heterogeneous sonochemistry of liquid-liquid or liquid-solid systems, and sonocatalysis (which overlaps the first two). The chemistry consequences of high-intensity ultrasound do not arise from an interaction of aconstic waves and matter at a molecular or atomic level. Instead , in liquids irradicated with high-intensity ultrasound, acoustic eavitations (the formation, growth, and collapse of bubbies) provide the primary mechanism for sonochemical effects.

Generators:

Transducer is a device, which generates the sound waves and converts acoustics/mechanical signals into electrical. The different types of transducers are given below:

(1) Thermal Generators:

Thermal generators change the frequency of AC generator. It produces sound waves of frequency up to 500 KC/S based on spark and arcs generators. Fluctuation of pressure resulting from the vibration in temperative of spark gap fed by a damped oscillatory current produced ultrasonic waves mainly producing sound waves.

(2) Mechanical Generators:

Mechanical generators is a propagation of high –energy ultrasound waves in liquids include very small turning in liquids. Galtons fixed its, upper limit of normal hearing and giving frequencies up to 500 KC/S. Hartman's gas jet generators and high-speed sirens also beong to this type.

(3) Electromagnetic Generators:

In electromagnetic waves a travelling disturbance in space is produced by the acceleration of an electric charge, comprising an electric field on a magnetic field at right angle to each other both moving at this same velocity in a direction normal to the p[lane of the two fields. This generators operates as a loudspeaker.

(4) Magneto-Strictive Generators:

When nickel is magnetized, dimension of this changed. Joule[18] discussed about magneto striction effect. When ferromagnetic or nickel tubes were placed in an alternating magnetic field parallel to their lengths. The chief advantage of the magneto-striction lies in the simplicity of its construction. Joules generators stable frequency exceeding 30 KC/S is impossible. Therefore, it has restricted utility.

(5) Ultrasound Generators:

Ultrasound generator is a device by which a sound can be generated by changing electrical, mechanical and thermal energy into acoustical energy.

(6) Piezo-Electric Generators:

The 'Piezo' is a Greek work meaning to pres' Curie brothers[19] in 1880 discovered the piezo-electric effect. Piezo-electric effect is defined as, when certain crystals and other oriented material are subjected to pressure or tension in certain direction, they develop electric charges on the certain surfaces. The amount of changes produced in proportional to the mechanical stress but the sign of charge opposite. This phenomenon is known as piezo-electric effect. Piezo-electric effect occurs in crystal having axis of non-symmetry.

In 1881 Lipmann[20] discovered the conversion of piezo-electric effect, which was later, verified by Curies and used as ultrasound generator. He found the conversion of piezo-electric effect and reported that if two surface of a x-crystal are covered by a metal film between continuous electrodes and an electric field is applied parallel to x-axis, The crystal will expand along y-axis and contract along x-axis, reversibly similarly longitudinal vibration are produced along y-axis by applying field through x-axis in certain crystals such as Roschelle salt (sodium, potassium tartrate) found the piezo-electric effect. In modern research work quartz crystal is used as transducer due to its high temperature coefficient and high stability.

Literature Cited:

An extensive work has been done for investigating the molecular interaction in liquid state through the analysis of ultrasound velocity related parameters but comparatively lesser work has been carried out in the recent past21-22 to correlate ultrasonic velocity with other physical and thermodynamic properties of liquids.

Mehrotra et. al[23] have been measured the ultrasonic velocity of solutions of samarium soaps in non-aqueous medium at a constant temperature and the results have been used to

evaluate the various acoustic parameters. The pre-micellar associations and the formation of micelles in samarium soap solutions have been determined by conduct metric measurements.

Mehra & Israni [24] have been measured ultrasonic velocity and density of pure hexadecane, heptadecane, 1-butanol, pentanol, 1-hexanol, 1-heptanol and in the binary mixture of hexodes heptadecane with 1-alkanols at 298.15 to 318.15 similarly ultrasonic velocity has also been measured for the ternary systems of hexadecane +1-butano and hexadecane +1-heptanol with dimethyl sullphoxide. dimethyl formamide and tetrahydrofuran each as a third component at three temperatures.

Pal&Kumar[25] has measured excess mol volumes and viscosities for binary liquid mixtures of n-alkoyethals 1-propanol have been measured as a function of composition at 308.15 and 318.15k and atmospheric pressure over the full range of composition.

Mishra[26] have been determined ultrasonic velocity, density, refractive index and velocity of dextrose molnonize, $ZnCl_2$ + dextrose, $ZnCl_2$ + methionine and $ZnCl_2$ + methionine dextrose in water. The observed and calculate values have been used to explain molecular association, ion-solvent and hydrogen bonding altercation. Bhatia et. al[27] have been measured refractive indices, nD at 298.15, 303.15,308.15 and 313.15 K and densities at 298.15K for the tenary mixtures of squalane with hexane+benzene; cyclohexane + benzene and hexane + cyclohexane over the complete mole fraction range.

Shiratani and Sasai[28] were measured growth and collapse of structural patterns in the hydrogen bond network in liquid water. Paikray et. al[29] have been meaurd ultrasonic velocity and density of binary mixture of di-isobutylkwtone with bromobenzene, chlocobenzene and toluene at temperature 303.16 K and frequency 2 MHz. The data of ultrasonic velocity and density have been used to calculate isentropic compressibility, acoustic impedance and inter-molecular free length and also excess of these quantities to study the molecular interactions.

Wang et.al.[30]investigated vibrational spectroscopic studies on solutions of $LIBF_4$ in acetonitrile as a function of concentration of lithium salts. Salvation structure of the lithium ion was suggested by density functional theory and the results were compared with the spectroscopic data.

Pal and Singh[31] investigated thermodynamic, acoustic and transport properties of binary mixtures of an alkoxy ethanol with an organic solvent. Kabadi et.al[32] have been presented extensively database on the thermodynamic interactions of n-alkanes and aromatic compound with the view of their importance in the pethrochemical industries particularly in the light of present day trends toward heavier feedstocks.

Rajendra[33] also computed at 298 ultrasonic velocity, density, and viscosity of binary liquid mixtures of n-heptane with n-propanol, iso-propanol, n-butanol and iso-butanol.

Earlier workers in ethanol-nitrobenzene and benzene [34-35] have carried out interaction studies on substituted acetic acids. Although extensive studies have been carried out in this field by several workers[36-39], yet no general relation between the sound velocity and concentration could be obtrained.

Sastry and Raj[41] measured viscosities and densities of methyl methacrylate +methanol+ n-propanol + n-butanol+n-propanol and n-hexanol at 503.15k and 313.15K. Shiratanio[42] have been investigated growth and collapse of structural patterns in the hydrogen bond network in liquid water. Sukackas et.al.[43] reported interferometric method of ultrasound measurement in liquids. Chlikian and Breslauer[44] have been presented ultrasonic study of proton-transfer reactions in aqueous solution of amino acids. Chalikian et.al[45] have been measured hydration and partial compressibility of biological compounds. Kharakoz and Sarvazyan[46] studied hydrational and intrinsic compressibility of globular proteins. Chalikian et.al[47] have been measured comparison of the heterophase fluctuation in multilayer and bilayer vesicular membranes of dipalmithoylphosphatidyl choline.

McClements et.al[48] have beeninvestigated influence of flocculation on the ultrasonic properties of emulsions theory. An extensive work has been done for investigating the molecular interaction in liquid state through the analysis of ultrasonic velocity related related parameters but comparatively lesser work has been carried out in the recent part[49-58] to correlated ultrasonic velocity with other physical and thermodynamic pr-operties of liquids.

Mehta et.al[67] have been obtained the partial molar volumes and isentropic compressibilities of 2,2,2-trichloroethanol, 2,2,2-trifluoroethanol and 1,1,1,3,3,3-hexafluoropropan -2-ol in pyrrolidin -2-one at 303.15 K. The ultrasonic velocity data have been combined with excess volume to compute molar isentropic compressibility and its excess values. Excess values of molar isentropic compressibility is negative in all the mixtures over the whole composition range and the values vary in the order 2,2,2-trichloroethanol<2,2,2-trifluoroethanol<1,1,1,3,3,3-hexafluoropropan-2-ol.

Nikam and his co-worker[68-72] have been reported the effect of molecular size, shape and molecular association of alkanols on volumetric, viscometric and acoustic properties of binary mixtures containing alcohos and develop new theoretical models for engineering applications . They also measured densities and viscosities of binary mixtures of acetonitrile with long chain of alkanols(C_5-C_{10}) at three different temperatures.

Mehta et.al[73] have been obtained the partial molar volumes and isentropic compressibilities of 2,2,2-trichloroethanol, 2,2,2-trifluoroethanol and 1,1,1,3,3,3-hexafluoropropan -2-ol in pyrrolidin -2-one at 303.15K from measurements of excess volume and ultrasonic velocity. The results are compared and discussed to gain insight into the changes in molecular association equilibria and structural effects in these systems.

Recently thermodynamics of ternary mixtures have drawn the attention of many researchers[74-84] because the thermodynamic properties of ternary mixtures can be determined from the properties of binary mixtures.

Demetriades and McClements[85] have been reported ultrasonic attenuation spectroscopy study of flocculation in protein-stabilized emulsions.

Soto et.al[86] were measured densities, refractive indices, and isentropic compressibility for the system 1-butanol+ethanol+2-methoxy-2-methylpropane at 298.15k and atmospheric pressure. Pressure. The deprived excess molar volumes, deviations of molar refractions from the mole fractions average, and deviations of isentropic compressibility from the volume fraction average were correlated by the Redlich-Kister polynomial.

Sneha et.al[87] have been investigated the solution properties of a variety of different sapid substances from all four basic taste modalities, namely, sweet (n=24), salty(n=11) and bitter(n=2),. Some multisapophoric molecules, i.e. molecules exihibitingmore than one taste, have also been included in the study in an attempt to define their properties in relation to the tastes they exhibit; eight sweet bitter and there salty-bitter molecules were used. The density and sound velocity of their solutions in water been measured and their apparent volumes, apparent compressibilities and compressibility hydration numbers calculated and compared.

Upadhyaya[89-90] computed ultrasound velocity in the solutions of rare earth metal soaps in benzene-methanol mixture at different temperatures in order to determine the CMC, compressibility behavior, Garnsey's constant and various other acoustical parameters in the light of Jacobson's model. Rao's formalism, Bachem's relationship.

THF is commonly used for preparation of the Grignard reagents, the most useful and versatile reagents known to the organic chemists. The use of alcohols in preparing a number of compounds like aldehydes, ketone, acids, alkenes, alkanes, halides, etc. are well known. Thus, THF+1- butanol/tert-butanol mixed solvents would enable us to have a large number of solvents, with appropriate physicochemical properties, which can be used for a particular chemical process.

Banipal & Rattan et.al[92] had studied the densities, viscosities and ultrasonic velocities of binary mixtures, butanol and iso butanol with 1,4 dioxane at 298.15, 303.15, 308.15 and 313.15K over the whole composition range. These data have been utilized to estimate the excess volume, excess viscosity, excess compressibility, excess Gibb's free energy, grunberg and Nissan parameter, enthalpy, entropy, and free energy of activation of viscous flow have also been estimated using Eyring's equation from viscosity and density data.

References

1. Blandamer, M.J. : J. Chem. Soc faraday trans, 94.(1998), 1057.
2. Blandamer, M.J. : Chem. Soc. Rev., 27 (1998),73.
3. Ries, J.C.R. : J. Chem. Soc faraday trans, 94,(1998), 2385.
4. Alberto, A., Eva, R. & Ans, S. : J. of solution chem., 27(10), (1998),911.
5. Vyacheslab, v. Melent'ev, M.F. : J. chem. Eng. Data 51(1),(2006),181. Bolotnikov,& Yurij A.N.
6. Rohman, N., Dass, N. N., & : J. Chem. Eng. Data,44, (1999),465, Mahiuddin,S
7. Ghosh,S., Pande, K.N. & Wankhade ,: : Indian J. of pure & Appl. Physics, Y.D. 42, (2004) 729
8. Bhardwaj, M.C., : "High-resolution ultrasonic Nondestructive Characterization", Cer. Bull., 69,9 (1990)
9. Bhardwaj, M.C. & Bhalla , A., : "Ultrasonic characterization of ceramic Superconductors", J. Mat Sci. Lett., 10, (1991)
10. Bhardwaj, M.C., : "Evolution, Practical concepts and examples of Ultrasonic NDC." Ceramic Monographs, Supplements ti inter ceramic, 41, (1992).
11. Kulkarni, N., Moudgil, B.& Bhardwaj : "Ultrasonic characterization of Green and M., Sintered Ceramics: I, Time Domain," Am. Cer. Soc., cer. Bull, 73(6),(1994).
12. Kulkarni, N., Moudgil, B.& Bhardwaj : "Ultrasonic characterization of Green and M.,Sintered Ceramics: II, FrequencyDomain," Am. Cer. Soc., cer. Bull, 73(7),(1994).
13. Kalita, G., Rohman, : N., & J. chem. Eng Data 42, (1997),943. Mahiuddin,
14. Rohman, N., & Mahiuddin,S. : J. Chem. Soc Faraday trans. 93, (19970, 2053.
15. Kalita, G., Rohman, N., & Aust. : J. chem. 51. (1998), 201. Mahiuddin, S.
16. Kalita, G., Rohman, N., : J. chem. Eng Data 43, (1998),148. Mahiuddin, S.
17. Naidu, P.R., and choudry, N.V. : Chem. Sci. (Switzerland), 19 (1982) 89.
18. Joule, J.P. : Phil., Mag., 30 (1847)76.
19. Curie J. & Curie ,P. : Compt., Rend., 91. (1880),294.
20. Lipmann, G. : Phys., Chem., 24, (1881),294
21. T. J. Ahrens : Nature, 342. (1989) 122.
22. Eden, D, James B. mattew, T, : Biophysics, 79 (1982) 815. Joseph, J. Rossa T & Frederic, M.R.
23. K. N. Mehrotra, Mithlesh chauhan & Springer Wien. 121.6-7, (1990)461.R.K. Shukla
24. Mehra, R & Israni, R Indian : J. chem., 43A. (2004) 743.
25. Pal, A. & Kumar, A. : Indian J. chem., 43A. (2004) 748.
26. Mishra, A.P. : Indian J. chem., 43A. (2004) 730.
27. Dubey, G.P. Tripathi, N. : Indian J. chem., 43. (2005) 175. & Bhatia, G.C.
28. Shiratani, E & Sasai, M. : J. chem. Phy., 104. 15, (1996)19.
29. Acharya,s., Paikray, R.& : Ind.J fo pure & Appl. Phys., 41, (2003) 855. Mohanty, G.C.
30. Xuan , X, zhang, H., Wang. J. & : J. Phys. Chem. Sci., 108. (2004) 7513.Wang,H.
31. Pal, A., & Singh, Y.P. : Indian J. of chem., 35A. (1996) 1120.
32. Palakkal, M., & Kabadi, V.N. : energy & fuels, 10. (1996)333
33. Rajendren, V. : Ind. J. of pure & Appl. Phys., 34, (1996)52.
34. Nikam P.S., & Hasan, M. : Ind. J. of pure & Appl. Phys., 24, (1986)52.
35. Nikam P.S., & Hiray, A.R. : J. pure & Appl. Ultrasonic., 18, (1996) 54.
36. Dash, U.N., & Mohanty, B.K. : Indian J. chem., 35A. (1996) 188,1047.
37. Sehgal, C.M., porter, B.R. & : Acoust. Soc. Am, 79 (1996)586. Greenleaf, J.F.
38. Manju, K.S., Rao, A.S., Sanyal V.R., : Ind. J. of phys., 70A, (1996)265. & Narayman, T.K.N
39. Dash, U.N., Mehanta, S., and : Indian J. chem., 35A. (1996) 463. Pasupalak, N.N.
40. Ali, A., & Naim, A.K. : Indian J. chem., 35A. (1996) 751.

41. Sastry, N.V., & Raj, M.M., : Indian J. chem., 35A. (1996) 49.
42. Shiratani, E & Sasai, M. : J. of chem. Physics,15,104, (1996) 19.
43. Sukackas, V.m Voleiois A & : Issn 1392-2114 Ultragrasas Nr., 1, (26)1996.Voleioiene,B.
44. Chalikian, T,V. & Breslauer, K. J. : Proc. Natl. Acad. Sci. USA, 93, (1996)1012.
45. Chalikian, T.V., Gindikin, V.S. & : Faseb Journ., 10, (1996)164. Voleioience, B.

ISSN : 2349-2597

A Study Of Uses Of Elementary Statistics

Dr. Rajiv Phillip
Associate Professor, Department of Mathematics
St. Johns College, Agra.

Introduction

Statistics is the science of kings. Statistics was used for counting of soldier in ancient time by the kings because this was the source of to knowing between healthy and weak soldier for war. At present the world is known as computer world. The computer has become so useful in the field of statistics that there may be some tendency to forget that it has its limitations. Like any other powerful device, it should be used with care. It is important to realize that the computer will do what it is instructed to do. If wrong method of analysis is employed, the result may not help in improving decisions. Statistics is an important part of mathematics. Decision making becomes more convenient and correct when the statistical inferences are brought to the aid of the decision making and to those responsible for making policies and chalking out programmes. Many kinds of policies like wage policy, reservation policies, etc, are framed of the basis of the statistical conclusions. So many methods are used in statistics that add to the knowledge of an individual, as well as enlarge his vision and experience about of the world of facts. The term statistics is derived from the latin word 'Status' which means a political state. It was a very old human civilization. The first census (Perhaps) was held in Egypt. In India it was also held about 2000 years ago. We had on efficient system of collecting, administrative statistics.

Objective Of The Study

The objectives of this paper are explain as firstly, introduction and historical aspects, Secondly functions of statistics, thirdly, use and importance of statistics in human life, and lastly concluded to understand the meaningful use and importance of statistics in the modern time.

Methodology

It holds purpose of war and finance. Sociology, Economics, Anthropology, Technology, Natural Science, Agriculture, Psychology, and education, all are depends on Statistics. The medical research worker often rely up on statistics to determine the significance of his results. The methodology of the study is based on theoretical.

Hypothesis of the study

The following are the most important Hypothesis of this topic A Study of Uses of Statistics are as under :-

1- Presentation of facts in Definite forms is the main work of statistics regarding data collection and presentation.
2- The second work of the statistics is Simplification of Complexities and comparison, and experiments.
3- Statistics helps in the formulation of policies, programmes, knowledge and the real values of the present, past and future.
4- This is one of the most valuable part of mathematics. Statistics helps in Forecasting and shows Relative importance, and last but not least,
5- Statistics Tests the laws of other Science and it is competent to find out the nearest result.
6- Statistics a source of income for professionals who have been made there carrier in statistics as an officer of Indian Statistical Service, as a Chartered Accountant, Company Secretary and other.

7- The system of collecting data related to births and deaths is mentioned in Kautilyas Arthshastra (around 300 B.C). A detailed account of administrative surveys conducted during Akbar's regime is given in Ain-l-Akbari written by Abul FazI Captain john Graunt of London (1620-1674) is kbown as father of vital statistics and his study is based on statistics of birhs and deaths.

8- It is also helped in developing new theories and concepts on the basis-of old theories and concepts. For instance, on the basis of data, certain changes have been made in the Malthusian theory of population and Quantity Theory of Money etc.

Functions of Statistics :

We find an interesting conclusion of the functions of the statistics in Robert W. Burgess, when he comments, "The fundamental gospal of statistics is to put back the domain of ignorance, prejudice, route of thumbs, arbitrary of premature decisions are made and principles are formulated on the basis of analyzed quantitative facts." Statistics puts every contention in figures and thereby it makes every thing look like definite obviously numerical conclusions are for more convincing and perfect. As if we say Italian is many time richer than India, it gives no definite conclusion but if we say the percapita income of Italian is 20 times greater than the percapita income in India, the conclusion is definite and will be more convincing. If data is presented through systematically arranged with-statistical techniques in the from of tabulation, diagrammatic representation, graphic presentation of averages, percentages, index numbers, etc, makes much easy to understand the facts.

Thus the problem of complexity of understanding a lot more things about crores of people is simplified through these statistical techniques of data presentation. Figures, without having any comparison with the figures of the same, kind, have no meaning and are useless. Statistics helps in the formulation of different types of government policies and programmes. Efficiency and ability of an individual is developed through due to use and study of statistics. Statistics is an important tool of Mathematics and also holds a significant place in the modern times. It is not merely a device for collecting a data but a means of developing sound technique for the representation and analysis of data thus collected. So, statistics helps in making such comparison.

Use and Importance in Human life :

The use and importance of statistics in human life is very important in all branches such as in Natural Science, Strategic, Social Science, Medical Science, Commerce & Management, etc, and also in other faculties. Statistics of consumption tell us of the relative strength of the desire of a certain section of the people and its variations from time to time. Distribution statistics disclose the economic conditions of the various classes of people.

Statistics and Accounting, are the powerful instruments which the modern economist has all his disposal, and of which business, through the development of research agencies and is making constantly greater use. National Sample Survey (NSS) Scheme was primarily started to collect statistical data for the use in planning in India. Not only plans of economic development are constructed on the basis of statistical data but the success that a plan achieves is also measured best by the use of statistical tools. The theoretical development r;f Statistics came during the mid seventeenth century and continued after that with the introduction of theory of Games and Chance (I.C. Probability). Francis Gatton (1822-1921) an English man Statistician, pioneered the use of statistical methods, in the field of Biometry. But in the modern time, the very popular theory of Karl Pearson (1857-1936) is very important to use statistics in every field of human life with his discovery of 'Chi-square Test' and foundation of statistical laboratory in England (1911). Sir Ronald A. Fisher (1890-1962), is also known as the father of modern statistics and applied it to various diversified fields such as Genetics, Biometry, Education, Agriculture and other fields. In this way we know

that Statistics deals with data collection for specific purpose. We make decisions about that data by analysing and interpreting it and also it represents data graphically and in tabular form, and value. The value is called the central tendency. As mean (Arithmetic mean), median and mode are three measures of central tendency.

A measurement of central tendency gives us a rough idea where data points are centred. But, in order to make better interpretation from the data. A producer of any goods, like scientific instruments, Chemical and other consumer and durable goods etc, estimates probable demand of his goods analysis the effect of trade cycles and seasonal and variations as also of changes in habits and customs of people on demand of his waves, and after taking all these factors into consideration finally takes decision about the quantum of production. Again cost accounting is entirely statistical in outlook. I-1 ...ce, public utility concerns like railway, electric supply companies, water work, etc, also make extensive use of statistics. Statistics are very helpful to a state as they help in administration. Modern states makes extensive use of statistical data on various problems. Before enforcing its policy a state has to examine its pros and cons through numerical data. As we see that a statistical analysis of war between any country like the Indian and Pakistani casualties during war in 1965 revealed that the proportion of officers among those killed was higher on the Indian side. During the war, military requirement of goods and commodities increase tremendously. Complete inspection of each and every item involves huge expenditure and a larger number of personnel and it can also not be done expediously.

Here statistics come to the help of army. Thus, use of statistics in the time of peace and war is not only significant but very essential. he universality of statistics is enough to indicate its importance, use in all faculties of human life and indispensability to the modern world. By statistical analysis we can study the manner is which people spend their income over various items of expenditure namely, food, clothing house rent, etc. Statistics of production describe wealth of a nation and compare it year after year showing there by the effect of changing economic policies and other factors on the level of production. We should also have an idea how the data are scattered or how much, they are bunched around a measure of central tendency. To day we live in a period of transition when a man enters it business he enters the profession of foreca- Ling because sucess in business is always the results of prevision in forecasting and failure in business in turn due to faulty reasoning and in accurate analysis of various causes affecting a particular phenomenon.

Modern statistical methods and statistical data are being found increasingly useful in research in different fields. In the field of industry and commerce statistician carry on many type of researches. They always try to find out the sources and causes of variations of different products from their standard quality. We thus find that the statistical methods are of very wide, almost universal applicability. Statistics, when use effectively, become deeply intertwined in the whole fabric of the subject.

Conclusion :

Statistics is always helping to forecasting the situation through estimating the variable that exist in the past, about in times to come in future events. The use of some statistical techniques like extraplation and time series analysis, helps in saying something above thz, future course of events. On the other hand, the correlation between two facts is explained by statistics . It is very clear that statistice is a branch of Mathematics, which deals with data. Statistics in Plural stand for the datas, and in singular stands for the subject that treats its problems with the help of systematic arrangement of numerals, called data. In another way I may that statistics uses data, collected through systematic method of data collection and the conclusion. The scope, use and importance is very wide indeed. It covers vast area of human life as in the field of Natural Science, Social science, Life Science, Commerce & Management and Technology, etc.

Reference :-

- Rothman, Kenneth J; Greenland, Sander; Lash, Timothy, eds. (2008). "7". Modern Epidemiology (3rd ed.). Lippincott Williams & Wilkins. p. 100.
- Mosteller, F., & Tukey, J. W. (1977). Data analysis and regression. Boston: Addison-Wesley.
- Nelder, J. A. (1990). The knowledge needed to computerise the analysis and interpretation of statistical information. In Expert systems and artificial intelligence: the need for information about data. Library Association Report, London, March, 23–27.
- Chrisman, Nicholas R (1998). "Rethinking Levels of Measurement for Cartography". Cartography and Geographic Information Science. 25 (4): 231–242. doi:10.1559/152304098782383043.
- Pratiyogita Darpan
- Study of mean by notes.
- Study of Standard Deviations by notes.
- Competitive Math.
- Internet Help.
- D. Rowntree, “Statistics without tears: a primer for non-mathematicians,” (Scribner, New York, 1981). SS&H: QA276.12 .R68 1981
- D.B. Orr, “Fundamentals of Applied Statistics and Surveys,” (Chapman and Hall, New York, 1995). SS&H: QA276.12.O77
- D. Huff, “How to Lie with Statistics,” (Penguin, Harmondsworth, 1973). SS&H: HA29 .H82 1973 (Not a book on how to be dishonest, but a book on the ways statistics can be presented to give misleading conclusions.)
- Kendall, D.G. (1951) : “Some Problems in the Theory of Queues”, J. Royal Stat. Soc., B-13, 151-173.
- Kijima, M. (1992) : “The Transient Solution of a Class of Markovian Queues”, Comp. and Maths. With Appl., 24, 17-24.
- Sharma, O.P. (1990) : “Markovian Queues”, ELLIS Horwood.
- Shrivastava, H.M. and Kashyap, B.R.K. (1982) : “Special Functions in Queueing Theory and Related Stochastic Processes”, John Wiley and Sons, New York.
- Dodge, Y. (2006) The Oxford Dictionary of Statistical Terms, Oxford University Press. ISBN 0-19-920613-9
- Elementary Statistics
- Advanced Statistics
- Research Journals of Mathematics
- Graphical Presentation of Data by Research Scholars
- NCERT Books of Mathematics.
- Romijn, Jan-Willem (2014). "Philosophy of statistics". Stanford Encyclopedia of Philosophy.
- Read more: http://www.businessdictionary.com/definition/statistics.html
- Lund Research Ltd. "Descriptive and Inferential Statistics". statistics.laerd.com. Retrieved 2014-03-23.
- "How to Calculate Descriptive Statistics". Answers Consulting. 2018-02-03.
- "Definition of STATISTICS". www.merriam-webster.com. Retrieved 2016-05-28.
- "Essay on Statistics: Meaning and Definition of Statistics". Economics Discussion. 2014-12-02. Retrieved 2016-05-28.
- Moses, Lincoln E. (1986) Think and Explain with Statistics, Addison-Wesley, ISBN 978-0-201-15619-5. pp. 1–3
- Hays, William Lee, (1973) Statistics for the Social Sciences, Holt, Rinehart and Winston, p.xii, ISBN 978-0-03-077945-9
- G. Kranzler and J. Moursund, “Statistics for the Terrified” 2nd ed., (Prentice Hall, Upper Saddle River, 1999). Ipw QA276.12.K73
- G.F.K. Naylor and L.E. Enticknap, “Statistics Simplified. An Introduction for Social Scientists and Others.” (Harcourt Brace Jovanovich Group, Sydney, 1981).

- H. Motulsky, “Intuitive Biostatistics: A Nonmathematical Guide to Statistical Thinking,” (2nd ed.) (Oxford University Press, 2010).
- Moore, David (1992). "Teaching Statistics as a Respectable Subject". In F. Gordon and S. Gordon. Statistics for the Twenty-First Century. Washington, DC: The Mathematical Association of America. pp. 14–25. ISBN 978-0-88385-078-7.
- Chance, Beth L.; Rossman, Allan J. (2005). "Preface". Investigating Statistical Concepts, Applications, and Methods (PDF). Duxbury Press. ISBN 978-0-495-05064-3.
- Lakshmikantham,, ed. by D. Kannan,... V. (2002). Handbook of stochastic analysis and applications. New York: M. Dekker. ISBN 0824706609.
- Schervish, Mark J. (1995). Theory of statistics (Corr. 2nd print. ed.). New York: Springer. ISBN 0387945466.
- Wolfram, Stephen (2002). A New Kind of Science. Wolfram Media, Inc. p. 1082. ISBN 1-57955-008-8.
- Freedman, D.A. (2005) Statistical Models: Theory and Practice, Cambridge University Press. ISBN 978-0-521-67105-7
- McCarney R, Warner J, Iliffe S, van Haselen R, Griffin M, Fisher P (2007). "The Hawthorne Effect: a randomised, controlled trial". BMC Med Res Methodol. 7 (1): 30. doi:10.1186/1471-2288-7-30. PMC 1936999 PMID 17608932.
- van den Berg, G. (1991). Choosing an analysis method. Leiden: DSWO Press
- Hand, D. J. (2004). Measurement theory and practice: The world through quantification.London: Arnold.
- "Cohen (1994) The Earth Is Round (p < .05)". YourStatsGuru.com.
- Rubin, Donald B.; Little, Roderick J. A., Statistical analysis with missing data, New York: Wiley 2002
- Ioannidis, J. P. A. (2005). "Why Most Published Research Findings Are False". PLoS Medicine.
- Warne, R. Lazo; Ramos, T.; Ritter, N. (2012). "Statistical Methods Used in Gifted Education Journals, 2006–2010". Gifted Child Quarterly. 56 (3): 134–149. doi:10.1177/0016986212444122.